Product introduction

Description

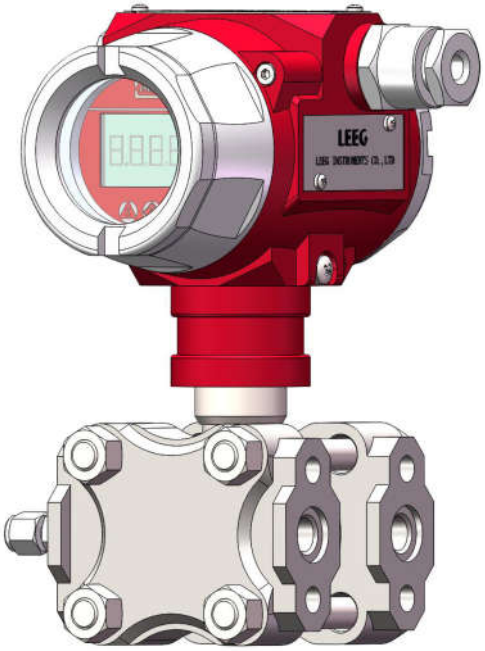

Monosilicon pressure transmitter

DMP305X monosilicon pressure transmitter is a high performance pressure transmitter with international leading technology meticulously designed by LEEG instrument, using the world's most advanced monosilicon pressure sensor technology and patent encapsulation technology.
Monosilicon pressure sensor locates on the top of the metal body and stay away from the medium interface to realizes mechanical isolation and thermal isolation. Glass sintering sensor wire realizes high strength electrical insulation of metal base and improves the capability of flexibility of electronic circuit and transient voltage resistance protection.
All these original encapsulation technologies enable DMP305X to easily cope with extreme chemical occasion and mechanical load, and own strong resistance to EMI, sufficient to respond to the most rigorous industrial environment applications, which are the genuine invisible instruments.

Main parameters

Pressure types	Differential pressure
Measuring range	200Pa - 10MPa, Please refer to the ordering information chapter
Output signal	4-20mA、4-20mA+HART, customer
Reference accuracy	±0.075% URL, optional ±0.05% URL

Measuring medium

Liquid, gas, or steam flow as well as liquid level, density and pressure

Field of application

Pressure, level, differential pressure, density, interface, flow

Approvals

CE MC Ex (VEPS) IECEx RoHS

Disclaimer: all the data used in the product description is not legally binding. Relevant technical details may be changed due to further improve

Technical specifications

Measuring range and limit

Nominal value	Smallest calibratable span	Lower range limit (LRL)	Upper range limit (URL)	Static pressure limit	High pressure side overload limit	Low pressure side overload limit
6kPa	200Pa	-6kPa	6kPa	25MPa	25MPa	16MPa
40kPa	400Pa	-40kPa	40kPa	40MPa	25MPa	16MPa
250kPa	2.5kPa	-250kPa	250kPa	40MPa	25MPa	16MPa
1MPa	10kPa	-500kPa	1MPa	40MPa	25MPa	16MPa
3MPa	30kPa	-500kPa	3MPa	40MPa	25MPa	16MPa
10MPa	100kPa	-500kPa	10MPa	40MPa	25MPa	16MPa
Adjust requirements: lower range value (LRV) and upper range value (URV) can be adjusted within the scope of the upper and lower range limit, when | URV | ≥ | LRV | , needs | URV | ≥ smallest calibratable span when | URV | ≤ | LRV |, needs | LRV | ≥ smallest calibratable span						

Standard specifications and reference conditions

Test standard: GB/T28474 / IEC60770; zero based-calibration span, linear output, silicone oil filling, 316L stainless steel isolation diaphragm.

Performance specifications

The overall performance including but not limited to 【Reference accuracy】,【Environment temperature effects】, 【Static pressure effects】and other comprehensive error
Typical accuracy: ±0.075% URL
Stability: ±0.2% URL/5 years

Reference accuracy

Including linearity, hysteresis and repeatability. calibration temperature: 20℃ ± 5℃			
Linear output accuracy	TD ≤10 (note 1)	±0.075% URL	Nominal value 6kPa、40kPa 250kPa、1MPa 3MPa、10MPa
	10<TD≤100	±0.0075TD% URL	
Square root output accuracy is 1.5 times linear output accuracy			
Note 1: TD is Turn down, when | URV | ≥ | LRV | , TD=URL/ | URV | when | URV | ≤ | LRV | , TD=URL/ | LRV |			

Ambient temperature effects

Within the range -20-80℃ total impact	±(0.1+0.1TD)% URL

Static pressure effects

Effect on zero	±0.15TD % URL/10MPa
Effect on full scale	±0.2% URL/10MPa

Power supply effects

When power supply voltage is within 10.5/16.5-55VDC, zero and span change should not more than ±0.005% URL/V

Mounting position effects

Install error less than 400Pa, which can be corrected by PV=0 reset.

Vibration effects

According to IEC61298-3,<0.1% URL

Output signal

Two wire 4-20 mA output with digital communications, linear or square root output programmable, HART protocol is superimposed on the 4-20mA signal.

Disclaimer: all the data used in the product description is not legally binding. Relevant technical details may be changed due to further improve

Technical specifications

Damping time

Total damping time constant: equal to the sum of damping time of amplifer and sensor capsule
Damping time of amplifer : 0-100S adjustable
Damping time of sensor capsule (isolation sensor diaphragm and silicon filling oil)≤0.2S
Startup after power off: ≤6S
Normal services after data recovery ： ≤31S

Weight

Net weight: about 4 kg (without mounting bracket and process connection adaptor)

Environment condition

Items	Operational condition
Working temperature	-40-85℃, integrated LCD display : -20-70℃
Storage temperature	-40-110℃, integrated LCD display : -40-85℃
Media temperature	Silicone oil filling:-40-120℃
	Inert oil filling:-10-80℃
Working humidity	5-100%RH@40℃
Protection class	IP67
Dangerous condition	ExiaIICT4(GYB16.1962X)* ExdIICT6(GYB16.1254X)*
*Please consult engineers for details	

Power supply

Item	Operating conditions
Standard/flame proof	10.5-55VDC
HART protocol	16.5-55VDC,communication load resistance 250Ω
Load resistance	0-2119Ω for operation, 250-600Ω for HART protocol
Transmission distance	<1000 meters
Power consumption	≤500mW@24VDC,20.8mA

Power supply and load requirements

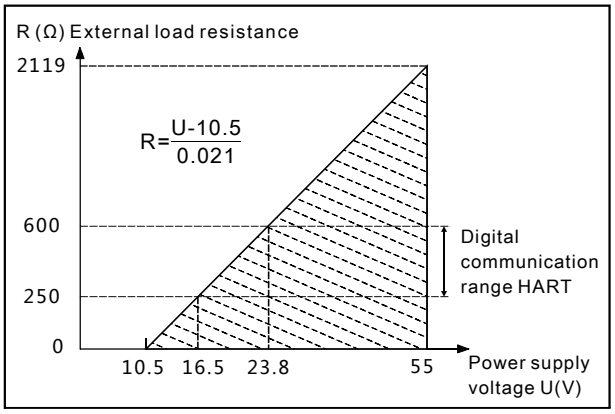

EMC environment

NO.	Test items	Basic standards	Test conditions	Performance level
1	Radiated interference	GB/T 9254/CISPR22	30MHz-1000MHz	OK
2	Conducted interference (DC power port)	GB/T 9254/CISPR22	0.15MHz-30MHz	OK
3	Electrostatic discharge immunity test (ESD)	GB/T 17626.2/IEC61000-4-2	4kV(Contact),8kV(Air)	B(Note2)
4	Immunity to radio frequency EM-fields	GB/T 17626.3/IEC61000-4-3	10V/m(80MHz-1GHz)	A(Note1)
5	Power frequency magnetic field Immunity test	GB/T 17626.8/IEC61000-4-8	30A/m	A(Note1)
6	Electrical fast transient / Burst Immunity Test	GB/T 17626.4/IEC61000-4-4	2kV(5/50ns,100kHz)	B(Note2)
7	Surge immunity requirements	GB/T 17626.5/IEC61000-4-5	1kV(Line to line) 2kV(Line to ground) (1.2us/50us)	B(Note2)
8	Immunity to conducted disturbances induced by radio frequency fields	GB/T 17626.6/IEC61000-4-6	3V(150kHz-80MHz)	A(Note1)

(Note 1)Performance level A: The performance within the limits of normal technical specifications.
(Note 2)Performance level B: Temporary reduction or loss of functionality or performance, it can restore itself. The actual operating conditions, storage and data will not be changed.

Disclaimer: all the data used in the product description is not legally binding. Relevant technical details may be changed due to further improve

Menu function

Specific menu

Transmission module type

Output signal	Local control	Remote control
4-20mA+HART	LCD/3 buttons on body	HART
4-20mA	LCD/3 buttons on body	-

LCD display unit

Display mode	Details
PV	Process variable shows on main screen, percentage and progress bar shows on secondary screen
mA	Current shows on main screen, percentage and progress bar shows on secondary screen
%	Percentage shows on main screen, percentage and progress bar shows on secondary screen

Unit

Unit	Definition
kPa	Kilopascal
MPa	Megapascals
bar	Bar
psi	Pounds per square inch
mmHg	Millimetre(s) of mercury@0℃
mmH2O	Millimeter of water@4℃
mH2O	Meter of water@4℃
inH2O	Inches of water@4℃
ftH2O	Feet of water@4℃
inHg	Inches of mercury@0℃
mHg	Meter mercury column@0℃
TORR	Torr
mbar	Millibar
g/cm2	Gram per square centimeter
kg/cm2	Kilogram per square centimeter
Pa	PA
ATM	Standard atmospheric pressure
mm	Millimeter(Note1)
m	Meter(Note1)
Note1: length unit need mark medium density	

Measuring menu set

Mark	State
URV	Upper range value, 20mA
LRV	Lower range value, 4mA

Damping time

Units	Setting range
S	0-100

Analog output type

Parameters	Output type
mA LINER	Linearity
mA $\sqrt{\ }$	Square root

Alarm signal

Parameters	Alarm signal
ALARM NO	None
ALARM H	20.8mA
ALARM L	3.8mA

Fix output

Parameters	Fix output value
FIX/C NO	None
3.8000	3.8000mA
4.0000	4.0000mA
8.0000	8.0000mA
12.000	12.000mA
16.000	16.000mA
20.000	20.000mA
20.800	20.800mA

Quick menu

Parameter	Instruction
PV=0	Set current output to zero value, used to correct the error cased by static pressure and installation.
Zero adjustment	4mA re-range with pressure
Span adjustment	20mA re-range with pressure
Restore factory setting	Restore backup data when error

Disclaimer: all the data used in the product description is not legally binding. Relevant technical details may be changed due to further improve

Product selection instruction

Sensor select instruction

Code	Nominal value	Description
S602D	6kPa	Range -6-6kPa, smallest calibratable span 200Pa
S403D	40kPa	Range -40-40kPa, smallest calibratable span 400Pa
S254D	250kPa	Range -250-250kPa, smallest calibratable span 2.5kPa
S105D	1MPa	Range -0.1-1MPa, smallest calibratable span 10kPa
S305D	3MPa	Range -0.5-3MPa, smallest calibratable span 30kPa
S106D	10MPa	Range -0.5-10MPa, smallest calibratable span 100kPa

Code	Position	Instruction
S	Diaphragm material	SS 316L
H		Hastelloy C
S	Fluid filling	Sillicon oil, temperature limit: -45-205℃
D		Inert oil, temperature limit: -45-160℃
S	Sensor seal	O-ring, FKM, temperature limit:-20-200℃

Diaphragm(S/H)

Seal(S)

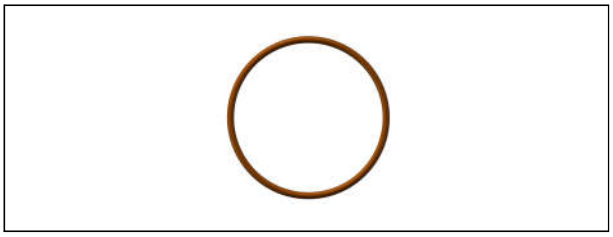

Electrical connection select instruction

Code	Item	Description
T1	Electrical connection	Aluminum-alloy terminal,2 cable entry M20*1.5(F), red body, white cover
R1	Cable entry protector	Waterproof connector M20X1.5 one side , blind plug another side, PVC material,6-8mm diameter cable only, IP67
R2		Flame proof, 1/2 NPT(F) one side, blind plug another side, stainless steel material, 6-8mm diameter cable only, IP67
R3		Flame proof, M20X1.5(F) one side, blind plug another side, stainless steel material, 6-8mm diameter cable only, IP67

Housing (T1)

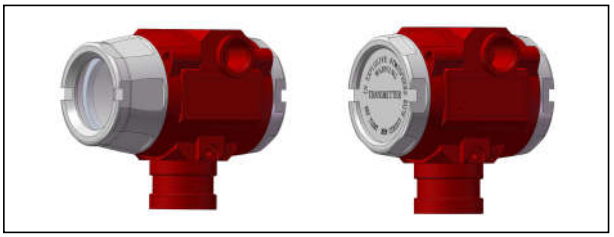

Standard cable entry protective adaptor(R1)

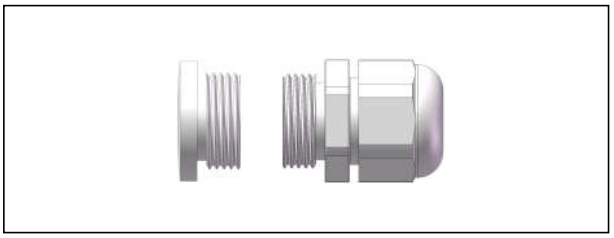

Flame proof cable entry protective adaptor(R2/R3)

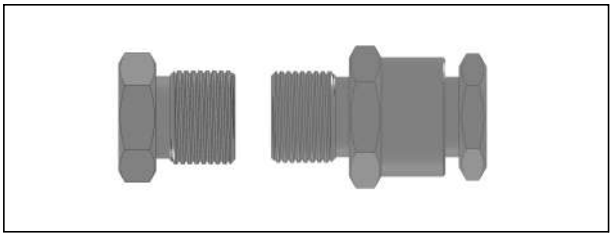

Disclaimer: all the data used in the product description is not legally binding. Relevant technical details may be changed due to further improve

Product selection instruction

Transmission module

Code	Items	Description
F	Output signal	4-20mA two wire, power supply: 10.5-55VDC
H		4-20mA+HART two wire, power supply:16.5-55VDC
A	Display	Without display
C		With LCD display

Display module(C)

Terminals (N1)

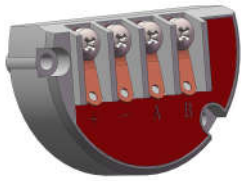

Process connection selection

Code	Item	Description
H1	Flange/ Drain Valve	H structure, double flanges, process connection 1/4-18NPT(F) ,drain valve on the rear end of flange, material SS 316
H2		H structure, double flanges, process connection 1/4-18NPT(F), drain valve on the up part of flange, material SS 316
H3		H structure, double flanges, process connection 1/4-18NPT(F),drain valve on the down part of flange, material SS 316

Flange

H1	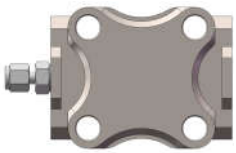
H2	
H3	

Wetted parts

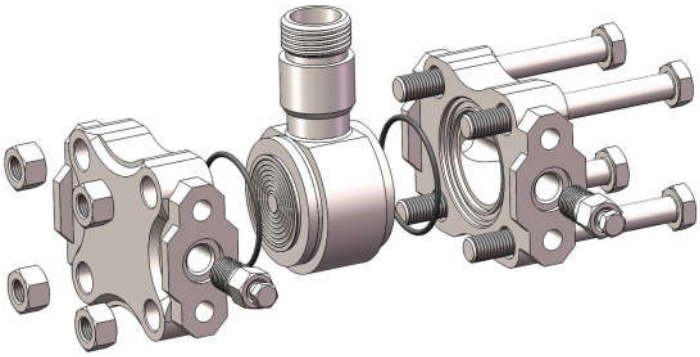

Disclaimer: all the data used in the product description is not legally binding. Relevant technical details may be changed due to further improve

Product selection instruction

Process connection adaptor

Code	Item	Description
A1	Process connection adaptor	Adaptor, M20*1.5 (M) with pressure-guided pipe Φ14*2*30,SS304, apply to H-structure
A2		Adaptor, 1/2-14NPT(F), SS 304, apply to H-structure

Adaptor, M20*1.5 (M) with pressure-guided pipe(A1)

Adaptor, 1/2-14NPT(F) (A2)

Brackets

Code	Items	Details
B1	Fixed mounting	Pipe mounting bent bracket,2" pipe, carbon steel, apply to H-structure
B2		Plate mounting bent bracket, carbon steel, apply to H-structure
B3		Pipe mounting flat bracket,2" pipe, carbon steel, apply to H-structure

Pipe mounting bent bracket(B1)

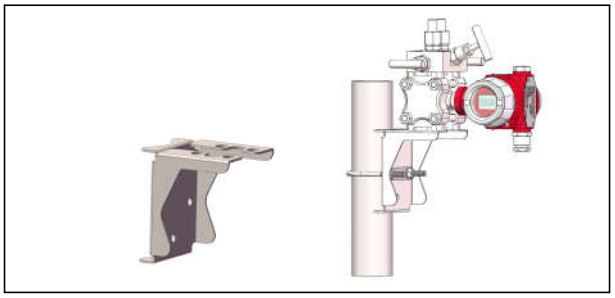

Plate mounting bent bracket(B2)

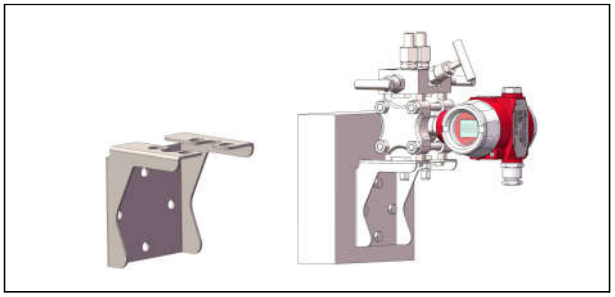

Pipe mounting flat bracket(B3)

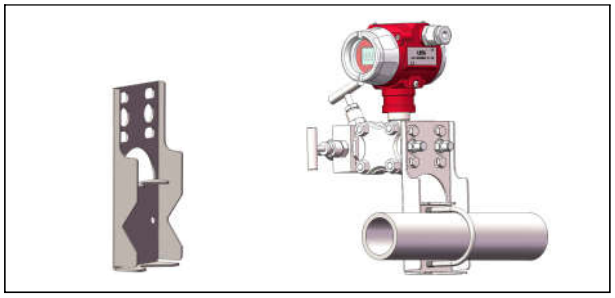

Disclaimer: all the data used in the product description is not legally binding. Relevant technical details may be changed due to further improve

Product drawing and dimension

Drawing and dimension with display(C)(unit:mm)

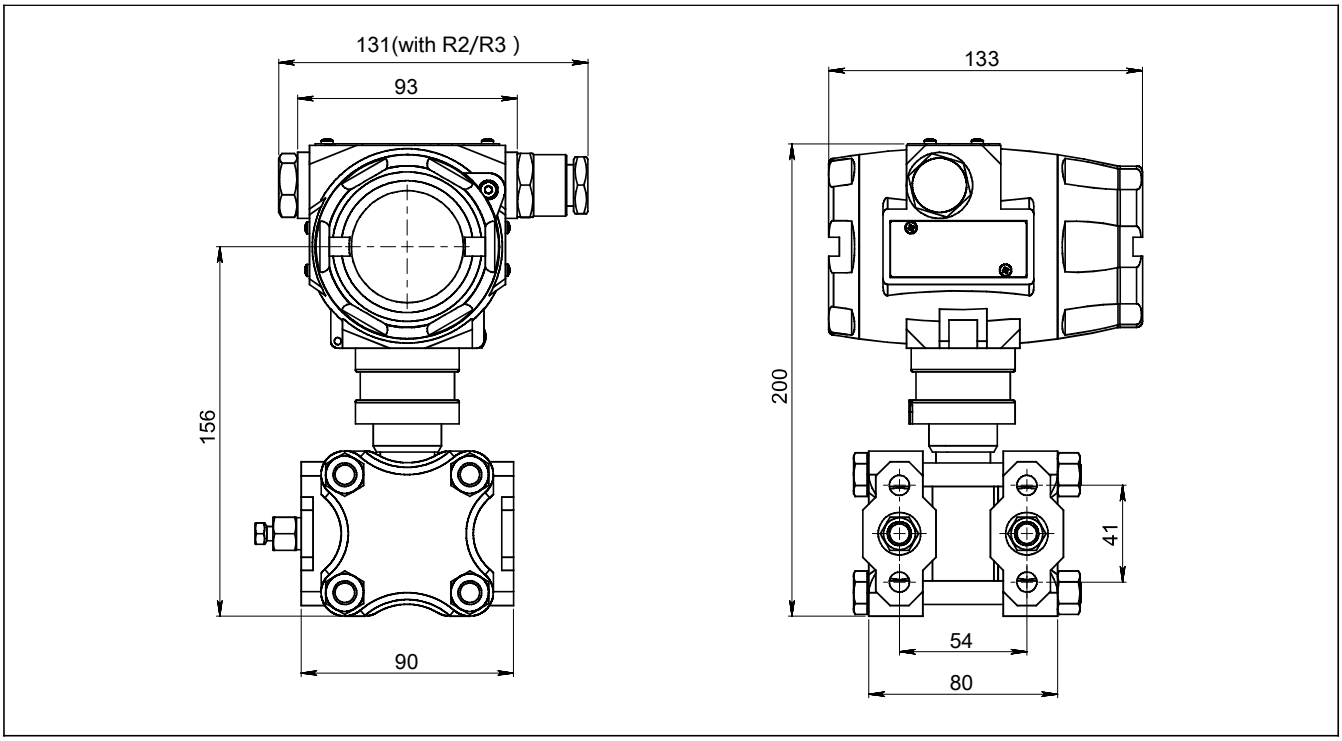

Drawing and dimension without display(A)(unit: mm)

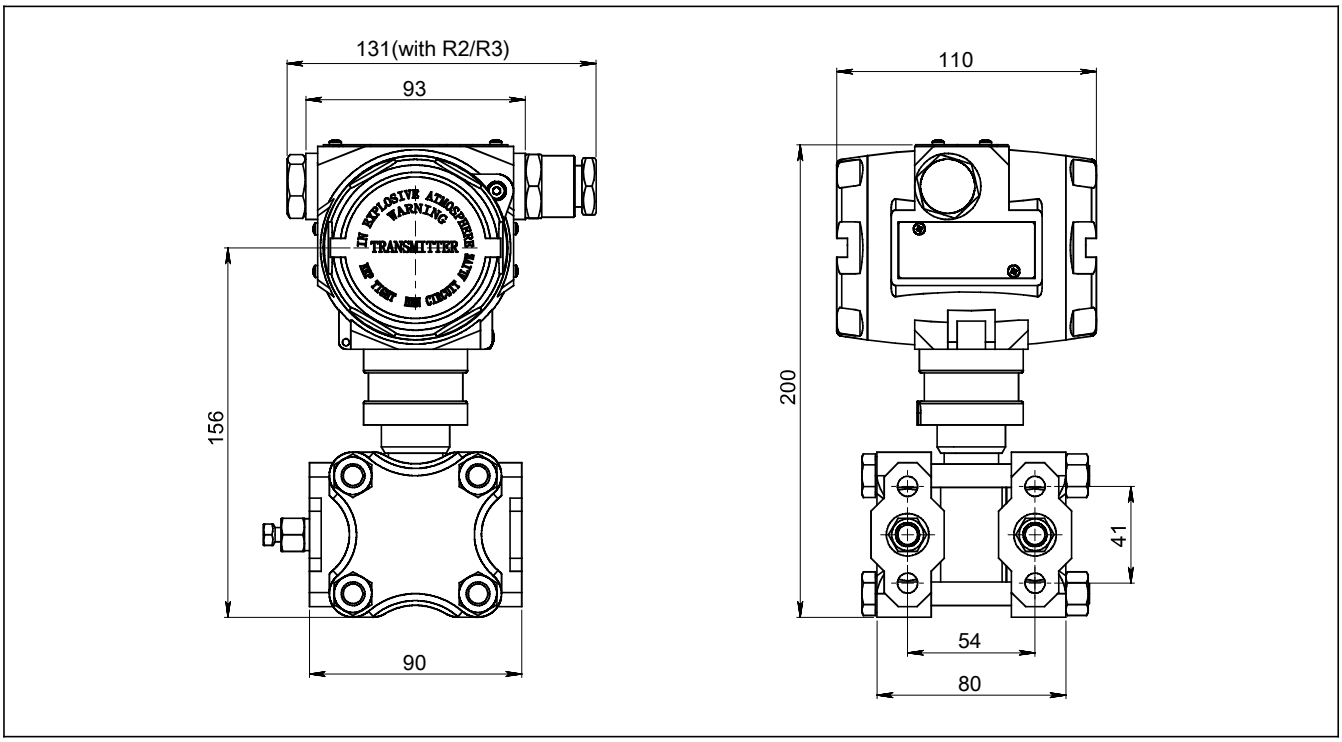

Disclaimer: all the data used in the product description is not legally binding. Relevant technical details may be changed due to further improve

Product drawing and dimension

Adaptor(A1) drawing and dimension(unit:mm)

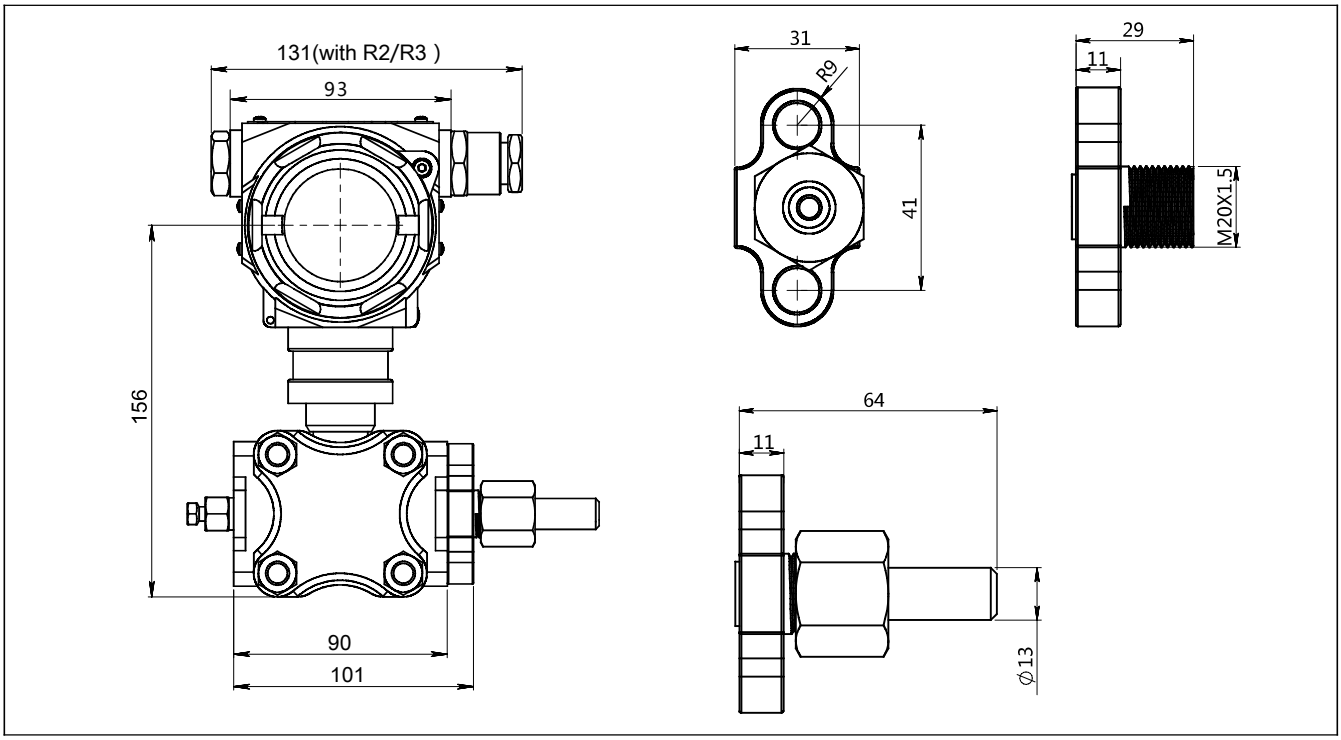

Adaptor(A2) drawing and dimension(unit:mm)

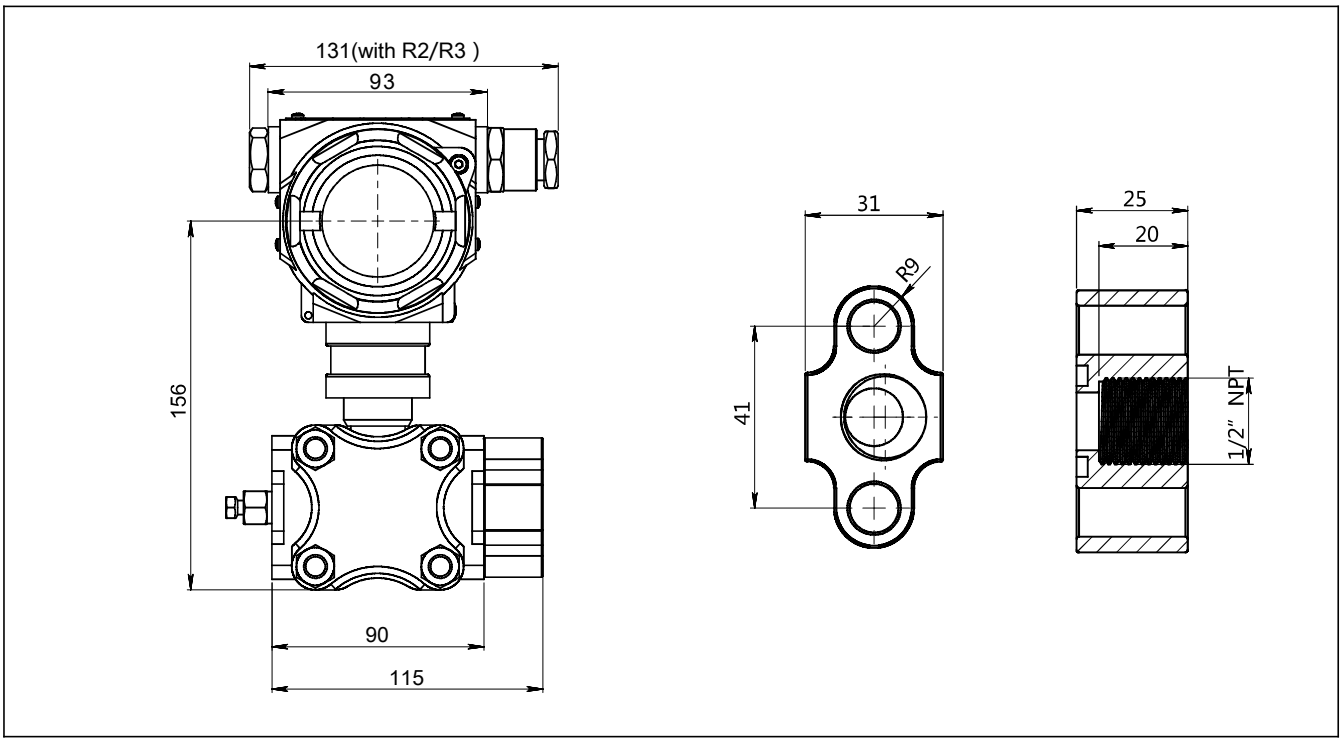

Disclaimer: all the data used in the product description is not legally binding. Relevant technical details may be changed due to further improve

Installation drawing and dimension

Pipe mounting bent bracket (B1)drawing and dimension (unit:mm)

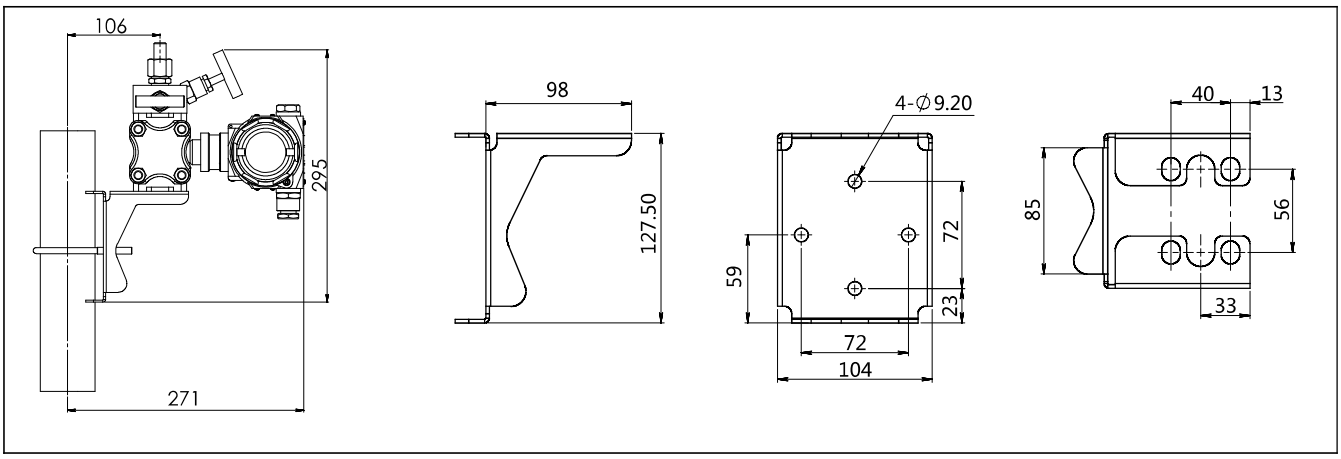

Plate mounting bent bracket(B2)drawing and dimension (unit:mm)

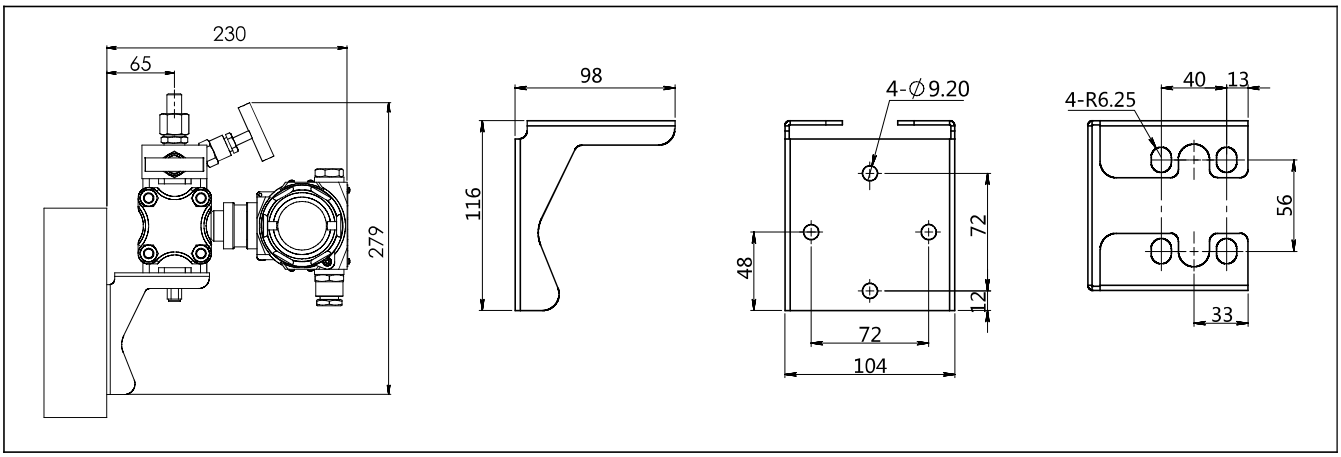

Pipe mounting flat bracket (B3)drawing and dimension (unit:mm)

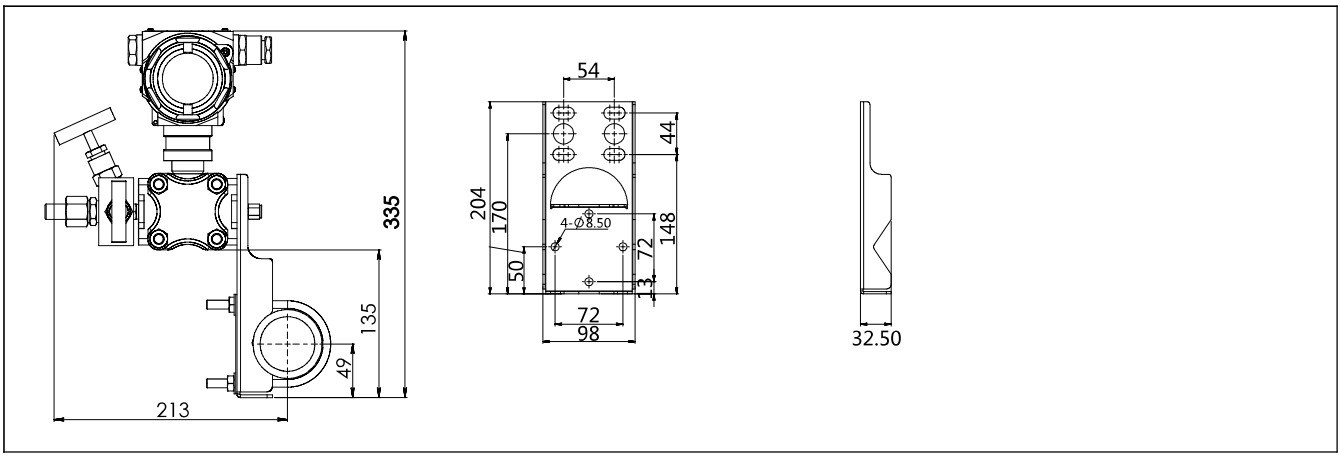

Disclaimer: all the data used in the product description is not legally binding. Relevant technical details may be changed due to further improve

Ordering information chapter

Item	Parameters	Code	Instruction	(*)fast delivery available
	Model	DMP305X-DST	Monosilicon differential pressure transmitter	
Sensor	Separator	-	Detailed specifications as following	
	Pressure range code	S602D	Nominal value(URL): 6kPa	*
		S403D	Nominal value(URL): 40kPa	*
		S254D	Nominal value(URL): 250kPa	*
		S105D	Nominal value(URL): 1MPa	
		S305D	Nominal value(URL): 3MPa	
		S106D	Nominal value(URL): 10MPa	
	Diaphragm material	S	SS316L	*
		H	Hastelloy C	
	Isolated filling fluid	S	Silicone oil filling, temperature limit: -45-250℃	*
		D	Inert oil filling, temperature limit: -45-160℃	
	Sensor seal	S	O-ring, FKM, temperature limit: -20-200℃	
Electrical connection	Separator	-	Detailed specifications as following	
	Electrical connection	T1	Aluminum-alloy terminal,2 cable entry M20*1.5(F), red body, white cover	*
	Cable entry protector	R1	Waterproof connector M20X1.5 one side , blind plug another side, PVC material,6-8mm diameter cable only, IP67	*
		R2	Flame proof, 1/2 NPT(F) one side, blind plug another side, stainless steel material, 6-8mm diameter cable only, IP67	
		R3	Flame proof, M20X1.5(F) one side, blind plug another side, stainless steel material, 6-8mm diameter cable only, IP67	*
Output	Separator	-	Detailed specifications as following	
	Output signal	H	4-20mA+HART two wire, power supply:16.5-55VDC	*
		F	4-20mA two wire, power supply: 10.5-55VDC	
	Display	C	LCD display	*
		A	Without LCD display	
Process connection	Separator	-	Detailed specifications as following	
	Process connection	H1	H structure, double flanges, process connection 1/4-18NPT(F) ,drain valve on the rear end of flange, material SS 316	*
		H2	H structure, double flanges, process connection 1/4-18NPT(F), drain valve on the up part of flange, material SS 316	
		H3	H structure, double flanges, process connection 1/4-18NPT(F),drain valve on the down part of flange, material SS 316	

Disclaimer: all the data used in the product description is not legally binding. Relevant technical details may be changed due to further improve

Selection

Additional options	Separator	-	Detailed specifications as following	(*)fast delivery available
	Process connection accessory	/A1	Adaptor, M20*1.5 (M) with pressure-guided pipe Φ 14*2*30,SS304, apply to H-structure	*
		/A2	Adaptor, 1/2-14NPT(F), SS 304, apply to H-structure	
	Fix mounting accessory	/B1	Pipe mounting bent bracket, 2" pipe, carbon steel, apply to H-structure	
		/B2	Plate mounting bent bracket, carbon steel, apply to H-structure	
		/B3	Pipe mounting flat bracket, 2" pipe, carbon steel, apply to H-structure	*
	Display mode	/D1	According to your requirement	
	Calibration report	/Q1	Calibration report provide by our company	
		/Q2	Calibration report provide by chinese authorised third party	
		/Q3	Static pressure report (Differential pressure only)	
	Approvals	/E1	Flame proof certificate, ExdbIICT6Gb, ExtbIIICT80℃CDb, IECEx	
		/I1	Intrinsic safety certificate, ExiaIICT4Ga, IECEx	
		/E2	Flame proof certificate, ExdIICT6, NEPSI	*
		/I2	Intrinsic safety certificate, ExiaIICT4, NEPSI	
		/F3	CE certificate	
	Wetted parts treatment	/G1	Ungrease treatment	
		/G2	Electropolishing treatment	

Disclaimer: all the data used in the product description is not legally binding. Relevant technical details may be changed due to further improve

Factory settings and parameters

Item	Menu mark	Factory setting value
Tag position	None	0(No specific settings)
Analog output type	mA	Liner(No specific settings)
Display mode	DISP	PV(No specific settings)
Alarm signal	ALARM	No(No specific settings)

Item	Menu mark	Factory setting value
Damping value	DAMP	0(No specific settings)
4mA Lower range value	LRV	According to the order
20mA Upper range value	URV	According to the order
Process unit	U	According to the order

Approvals

Factory certificate

Certification organization	Intertek
Quality management system	ISO9001-2008
Scope of certification	Design and production of pressure transmitter
Registration number	110804039

Flame proof certificate

Certificate organizzation	NEPSI
License scope	DMP305X pressure/differential pressure transmitter
Explosion-proof mark	ExdIICT6
Working environmental temperature	-25-+60℃
Maximum medium temperature	+80℃
Registration number	GYB16.1254X

RoHS

Certificate organizzation	ECM
License scope	DMP305X pressure/differential pressure transmitter
Mark	RoSH
Instruction	2011/65/EU
Certification criteria	IEC62321-1:2013 IEC62321-5:2014 IEC62321-2:2013 IEC62321-6:2015 IEC62321-4:2014 IEC62321-7-1:2015
Registration number	0H180504.SLIUQ03

CE

Certificate organization	ISET
License scope	DMP305X series pressure/ differential pressure transmitter
Mark	EU
EMC instruction	2014/30/EU
Standard	AC/0100708
Registration number	IT41353LG161207

Intrinsic safety certifite

Certificate organization	NEPSI
License range	DMP305X series pressure/ differential pressure transmitter
Explosion-proof mark	ExiaIICT4
Ambient temperature	-40-+60℃
Medium maximum temperature	+120℃
Registration number	GYB16.1962X
Intrinsically safe parameter description	Maximum input voltage:20VDC
	Maximum input current:100mA
	Maximum input power:0.7w
	Maximum internal equivalent parameters Ci(uF):0
	Maximum internal equivalent parameters Li(mH):0.01

Disclaimer: all the data used in the product description is not legally binding. Relevant technical details may be changed due to further improve

Premier TOTAL SOLUTION

Add: Premier Total Solution Co., Ltd.
594, 596 Soi Rama 2 Soi 60,
Samaedam,Bangkhuntien,
Bangkok 10150 Thailand
Tel : 02-4155818-20
E-mail : info@ptssolution.com
Web : www.ptssolution.com
Facebook : DiaphragmSeal

Disclaimer: all the data used in the product description is not legally binding. Relevant technical details may be changed due to further improve