Product introduction

Description

Standard

With cooling element

Hygienic pressure transmitter

Hygienic pressure transmitter, designed for food and pharmaceutical industry, is suitable for CIP/SIP cleaning and sterilization.Smart compact design, the welded process diaphragm medium parts is made of high quality stainless steel 316L, roughness≤0.4um, filling fluid with hygiene standard in line with FDA certification, variety of international standard process connections are available.

Main parameters

Pressure types	Gauge pressure
Measuring range	10kPa-3MPa, please refer to the ordering information chapter
Output signal	4-20mA, 4-20mA+HART, 0.5-4.5VDC, Modbus-RTU/RS485, customer
Reference accuracy	±0.2% URL, ±0.5% URL, customer

Measuring medium

Viscous, paste-like, adhesive, crystallising, particulatescontaining and contaminated media

Field of application

Pressure, level

Approvals

CE MC Ex VEPSI

Disclaimer: all the data used in the product description is not legally binding. Relevant technical details may be changed due to further improve

Technical specifications

Measuring range and limit

Nominal value	Smallest calibratable span	Lower range limit (LRL)	Upper range limit (URL)	Overpressure limit *
40kPa	10kPa	-40kPa	40kPa	1MPa
250kPa	40kPa	-100kPa	250kPa	4MPa
1000kPa	250kPa	-100kPa	1000kPa	6MPa
3MPa	1000kPa	-100kPa	3MPa	15MPa
The unit of the measuring range above can be converted into kg/cm², MPa and kPa. Provide other measuring range according to requirements. Adjust requirements: lower range value (LRV) and upper range value (URV) can be adjusted within the scope of the upper and lower range limit, minimum measuring range≤| URV - LRV |≤maximum measuring range.				
*Limit value of overpressure: depends on the pressure value of the parts with lowest pressure capacity				

Standard specifications and reference conditions

Test standard: GB/T28474 / IEC60770; Zero based-calibration span, Linear output, Silicon oil filling, 316L stainless steel isolated diaphragm.

Performance specifications

The overall performance including but not limited to 【reference accuracy】, 【environment temperature effects】and other comprehensive error
Typical accuracy: ±0.2% URL
Stability: ±0.2% URL/ year

Reference accuracy

Including linearity, hysteresis and repeatability. calibration temperature: 20℃±5℃			
Linear output accuracy	Typical value	±0.2%URL	Nominal value: 40kPa , 250kPa 1000kPa, 3MPa
	Max value/ Voltage output	±0.5%URL	

Ambient temperature effects(Typical)

Within the range - 20-80 ℃ total impact	±0.2%URL/10k

Power supply effects

Zero and span change should not be more than ± 0.005% URL/V when power supply changes in 10.5/16.5-55VDC

Loading effects

Zero and span change should not be more than ± 0.05% URL/kΩ

Vibration effects

Vibration resistence	According to IEC60068-2-6, 10g RMS (25-2000HZ)
Impact resistence	According to IEC60068-2-27 , 500g/1ms

Output signal

Signal	Type	Output
4-20mA	Linearity	Two wire
4-20mA+HART	Linearity	Two wire
0.5-4.5VDC	Linearity	Three wire
Modbus-RTU/RS485	Linearity	Four wire

Disclaimer: all the data used in the product description is not legally binding. Relevant technical details may be changed due to further improve

Technical specifications

Insulation resistance

≥ 20M Ω@, 100VDC

Damping time

Total damping time constant: equal to the sum of damping time of amplifer and sensor capsule
Damping time of amplifer: 0-100S adjustable
Diaphragm capsule (isolated diaphragm and silicon oil filling) damping time: ≤0.2S
Startup after power off: ≤3S (with HART communication: ≤0.2S)
Normal services after data recovery: ≤4S (with HART communication: ≤31S)

Environment condition

Items	Operational condition
Working temperature	-40-85℃
Storage temperature	-40-100℃
Media temperature	Hygienic fluid filling: -10-125℃; with heat exchange connector: -10-250℃*
	Silicon oil filling: -40-120℃, with heat exchange connector: -40-300℃n
Working humidity	0-95%RH
Protection class	IP67
Dangerous condition	ExiaIICT4(GYB16.1965X)nn
nUsing heat exchange connector may lead to zero offset and temperature drift. The degree depends on mounting position and filling fluid nnPlease consult engineers for details	

Technical Specifications

Signal output	4-20mA	4-20mA+HARTn	0.5-4.5VDC	0.5-4.5VDC (ratiometric output)	RS485
Power supply voltage	10-30VDC	10.5/16.5-55VDC	6-15VDC	5VDC	5VDC/9-30VDC
Electric current	≤20.8mA		≤3.5mA		≤7mA
Load resistance(Ω)	<(U-10)/0.0208	<(U-10.5)/0.0208nn	≥5k, recommend 100k		2
Transmission distance	<1000m		<5m		<1200m
Power consumption	≤500mW(20.8mA output@24VDC)		≤42mW(0.5-4.5VDC output@12VDC)		≤168mW(RS485 output@24VDC)
nFor this output type, the load resistance value in communication is 250Ω nnThe load resistance value 0-2119Ω is in nominal working condition, 250-600Ω is HART communication					

Disclaimer: all the data used in the product description is not legally binding. Relevant technical details may be changed due to further improve

Technical specifications

EMC environment(not for RS485 signal output)

NO.	Test items	Basic standards	Test conditions	Performance level
1	Radiated interference	GB/T 9254/CISPR22	30MHz-1000MHz	OK
2	Conducted interference (DC power port)	GB/T 9254/CISPR22	0.15MHz-30MHz	OK
3	Electrostatic discharge immunity test (ESD)	GB/T 17626.2/IEC61000-4-2	4kV(Contact),8kV(Air)	B(Note2)
4	Immunity to radio frequency EM-fields	GB/T 17626.3/IEC61000-4-3	10V/m(80MHz-1GHz)	A(Note1)
5	Power frequency magnetic field Immunity test	GB/T 17626.8/IEC61000-4-8	30A/m	A(Note1)
6	Electrical fast transient / Burst Immunity Test	GB/T 17626.4/IEC61000-4-4	2kV(5/50ns,100kHz)	B(Note2)
7	Surge immunity requirements	GB/T 17626.5/IEC61000-4-5	1kV(Line to line) 2kV(Line to ground) (1.2us/50us)	B(Note2)
8	Immunity to conducted disturbances induced by radio frequency fields	GB/T 17626.6/IEC61000-4-6	3V(150kHz-80MHz)	A(Note1)

(Note 1)Performance level A: The preformance within the limits of normal technical specifications.
(Note 2)Performance level B: Temporary reduction or loss of functionality or preformance, it can restore itself. The actual operating conditions, storage and data will not be changed.

Disclaimer: all the data used in the product description is not legally binding. Relevant technical details may be changed due to further improve

Product selection instruction

Sensor select instruction

Code	Nominal value	Description
S403G	40kPa	Range -40kPa-40kPa, smallest calibratable span 10kPa
S254G	250kPa	Range -100kPa-250kPa, smallest calibratable span 25kPa
S105G	1MPa	Range -0.1MPa-1MPa, smallest calibratable span 100kPa
S305G	3MPa	Range -0.1MPa-3MPa, smallest calibratable span 300kPa
Adjust requirements: lower range value (LRV and upper range value (URV can be adjusted within the scope of the upper and lower range limit, minimum measuring range≤| URV - LRV |≤maximum measuring range		

Code	Position	Instruction
I	Sensor seal	Stainless steel welding seal

Electrical connection

Code	Description
D1	DIN43650 connector, IP65

DIN43650(D1)

Electrical connection

DIN43650(D 1)

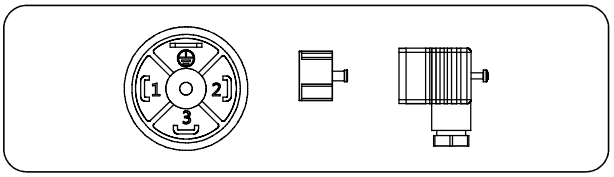

Label	Two wires	Three wires	Four wires	Modbus-RTU/RS485
1	Power+	Power+	Power+	Power+
2	Power-	Power-	Power-	Power-
3	Key-z	Signal+	Signal+	A+
⏚			Signal-	B-

Note: Key-z is modified zero pressure

Disclaimer: all the data used in the product description is not legally binding. Relevant technical details may be changed due to further improve

Product selection instruction

Transmission module

Code	Description
F	4-20mA two wire, power supply: 10-30VDC
H	4-20mA+HART two wire, power supply: 16.5-55VDC
R	Modbus-RTU/RS485 5V/9-30VDC
5	0.5-4.5VDC three wire, power supply: 6-15VDC
6	0.5-4.5VDC three wire, ratiometric output power supply: 5VDC
A	4-20mA two wire, intrinsic safety, power supply: 10-30VDC

Cooling element connector (HT)

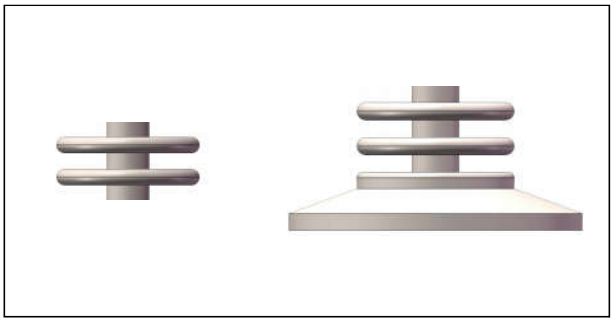

Process connection select instruction

Code	Items	Description
4	Process connector material	Stainless steel, SUS304
6		Stainless steel, SUS316
NT	Connection type	Standard connection, medium temperature: -25-85℃
HT		Cooling element connector, medium temperature: -40-150℃
F	Isolated filling fluid	Hygienic fluid filling, Neobee M-20, process temperature: -10-180℃
S		Silicon oil filling, process temperature: -45-205℃
S	Isolated diaphragm material	SUS316L
H		Hastelloy C
K01	Process connection specifications	Tri-Clamp 1-1/2"
K02		Tri-Clamp 2"
K03		DIN32676 DN32
K04		DIN32676 DN40
K05		DIN32676 DN50
K06		ISO2852 DN38
K07		ISO2852 DN40
K08		ISO2852 DN51
K09		DIN11851 DN25
K10		DIN11851 DN40
K11		DIN11851 DN50
K12		SMS DN1-1/2"
K13		SMS DN2"
K14		IDF DN1-1/2"
K15		IDF DN2"
K18		DRD
K20		Plug in tube flush hygienic clamp

Disclaimer: all the data used in the product description is not legally binding. Relevant technical details may be changed due to further improve

Product drawing and dimension

Standard drawing and dimension with DIN43650 (D1) (unit:mm)

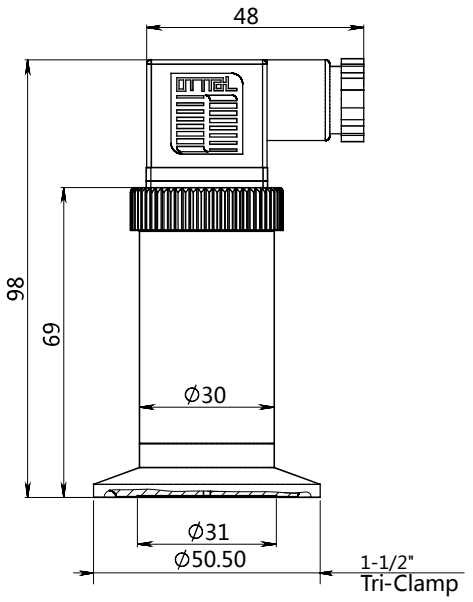

Weight: about 390g

Drawing and dimension with cooling element and DIN43650 (D1) (unit:mm)

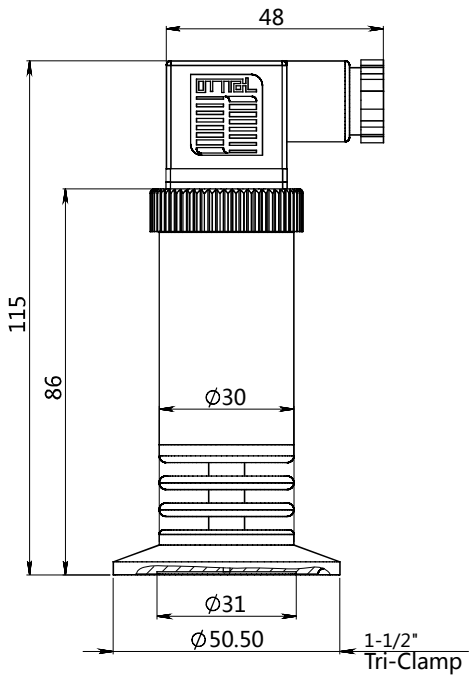

Weight: about 410g

Disclaimer: all the data used in the product description is not legally binding. Relevant technical details may be changed due to further improve

Product drawing and dimension

Process connection (K01-K08)(unit: mm)

Installation Sketches

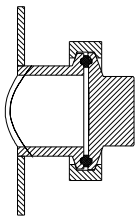

Dimension

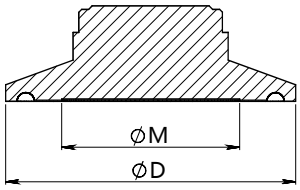

Standard	Specification	Size(ΦD)	Diaphragm size(ΦM)
Tri-Clamp	1-1/2"	50.5	31
Tri-Clamp	2"	64	42
DIN32676	DN32	50.5	31
DIN32676	DN40	50.5	31
DIN32676	DN50	64	42
ISO2852	DN38	50.5	31
ISO2852	DN40	64	42
ISO2852	DN51	64	42

Process connection (K09-K11)(unit: mm)

Installation Sketches

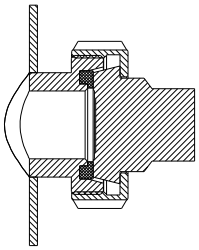

Dimension

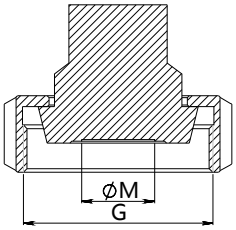

Standard	Specification	Size(G)	Diaphragm siz(ΦM)
DIN11851	DN25	Rd 52*1/6	20
DIN11851	DN40	Rd 65*1/6	31
DIN11851	DN50	Rd 78*1/6	42

Process connection (K12-K13)(unit: mm)

Installation Sketches

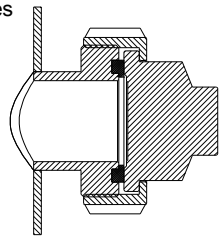

Dimension

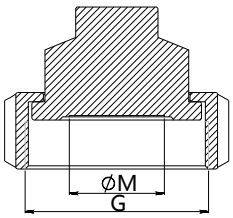

Standard	Specification	Size(G)	Diaphragm size(ΦM)
SMS	1-1/2"	Rd 60*1/6	31
SMS	2"	Rd 70*1/6	42

Process connection (K14-K15)(unit: mm)

Installation Sketches

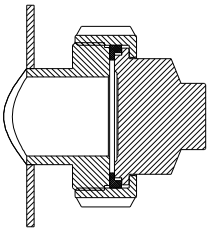

Dimension

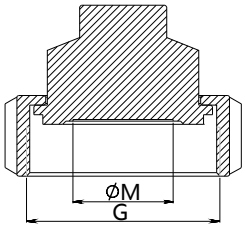

Standard	Specification	Size(G)	Diaphragm size(ΦM)
IDF	1-1/2"	IDF 1-1/2"	31
IDF	2"	IDF 2"	42

Disclaimer: all the data used in the product description is not legally binding. Relevant technical details may be changed due to further improve

Product drawing and dimension

Process connection (K18) (unit: mm)

Installation Sketches

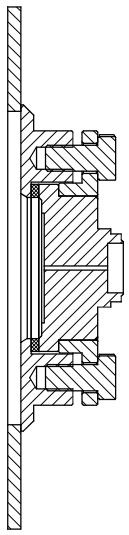

Dimension

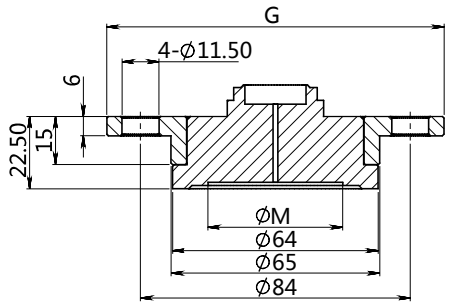

Standard	Specification	Size(G)	Diaphragm size(ΦM)
DRD	DN50	105	42

Process connection (K20) (unit: mm)

Installation Sketches

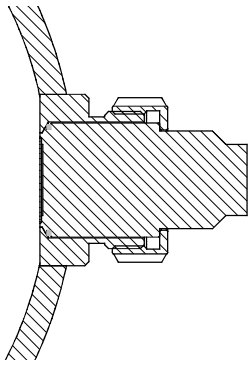

Dimension

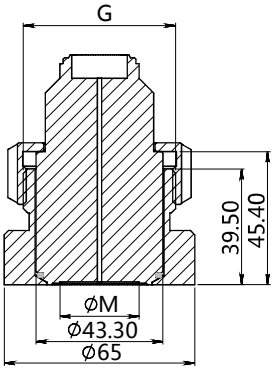

Standard	Specification	Size(G)	Diaphragm size(ΦM)
Normal	Standard	Rd 52*1/6	27

Disclaimer: all the data used in the product description is not legally binding. Relevant technical details may be changed due to further improve

Product drawing and dimension

Tri-Clamp (G1-G2) (unit: mm)

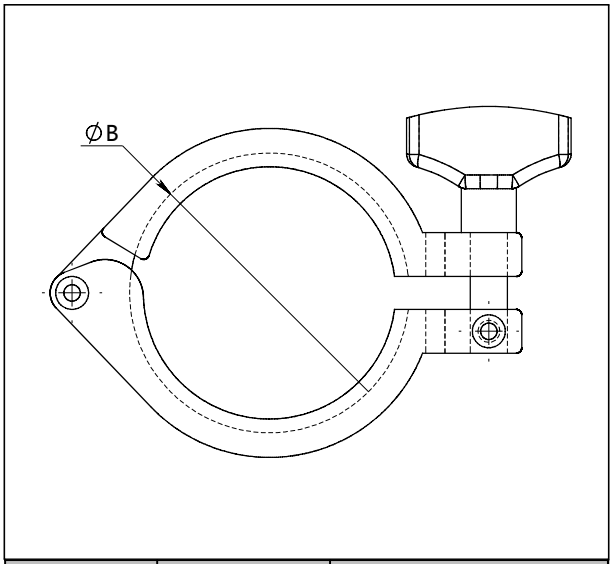

Standard	Specification	Size(ΦB)
Tri-Clamp	1-1/2"	53.9
Tri-Clamp	2"	67.4

Sealing gasket (M1-M2) (unit: mm)

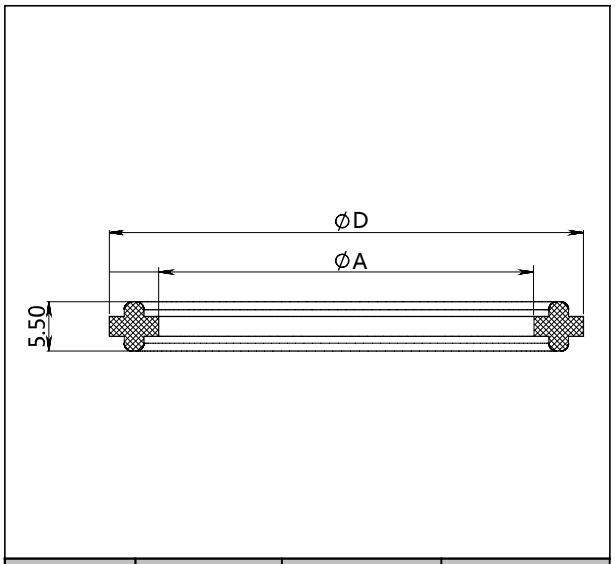

Standard	Specification	Size(ΦD)	Size(ΦA)
Tri-Clamp	1-1/2"	50.5	35
Tri-Clamp	2"	64	47.8

Welding adapter(Z1-Z1)(unit:mm)

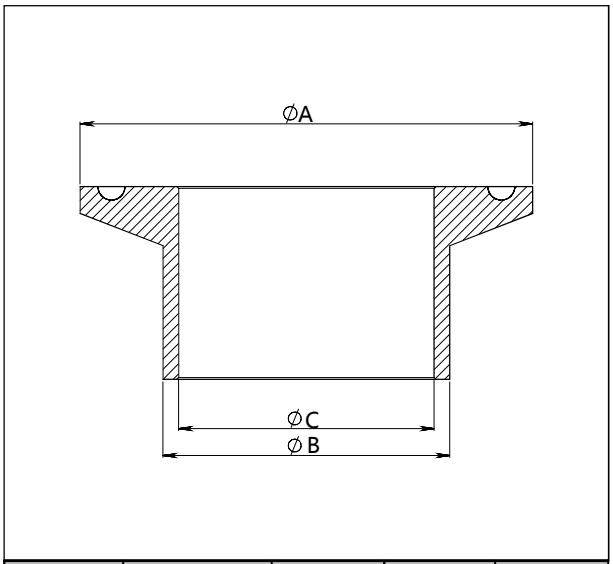

Standard	Specification	Size(ΦA)	Size(ΦB)	Size(ΦC)
Tri-Clamp	1-1/2"	50.5	38	35.6
Tri-Clamp	2"	64	51	48.6

Disclaimer: all the data used in the product description is not legally binding. Relevant technical details may be changed due to further improve

Ordering information chapter

Item	Parameters	Code	Instruction	(*) Fast delivery available
	Model	SMP858-TSD	Monosilicon gauge pressure transmitter	
Sensor	Separator	-	Detailed specifications as following	
	Pressure range code	S403G	Nominal value(URL): 40kPa	*
		S254G	Nominal value(URL): 250kPa	*
		S105G	Nominal value(URL): 1MPa	*
		S305G	Nominal value(URL): 3MPa	*
	Sensor seal	F	Stainless steel welding seal	
Electrical connection	Separator	-	Detailed specifications as following	
	Electrical connection	D1	DIN43650 connector, IP65	*
	Cable entry protector	R0	None	
Output	Separator	-	Detailed specifications as following	
	Output signal	F	4-20mA two wire, power supply: 10-30VDC	*
		H	4-20mA+HART two wire, power supply: 16.5-55VDC	*
		R	Modbus-RTU/RS485 5V/9-30VDC	
		5	0.5-4.5VDC three wire, power supply: 6-15VDC	
		6	0.5-4.5VDC three wire, ratiometric output, power supply: 5VDC	
		A	4-20mA two wire, intrinsic safety, power supply: 10-30VDC	
Body tube	Separator	-	Detailed specifications as following	
	Tube	53	Stainless steel tube length: 53mm (HART, Modbus-RTU/RS485 is not available)	*
		65	Stainless steel tube length: 65mm (with HART、Modbus-RTU/RS485)	*
		85	Stainless steel tube length: 85mm (with HART、Modbus-RU/RTS485)	
Process connection	Separator	-	Detailed specifications as following	
	Process connector material	4	Stainless steel, SUS304	
		6	Stainless steel, SUS316	*
	Connection type	NT	Standard connection, medium temperature: -25-85℃	*
		HT	Cooling element connector, medium temperature: -40-150℃	
	Isolated filling fluid	F	Hygienic fluid filling, Neobee M-20, process temperature: -10-180℃	
		S	Silicon oil filling, process temperature: -45-205℃	*

Disclaimer: all the data used in the product description is not legally binding. Relevant technical details may be changed due to further improve

Ordering information chapter

	Isolated diaphragm material	S	SUS316L	*
		H	Hastelloy C	
	Process connection specifications	K01	Tri-Clamp 1-1/2", max measuring range 2MPa	*
		K02	Tri-Clamp 2", max measuring range 2MPa	
		K03	DIN32676 DN32, max measuring range 1.6MPa	
		K04	DIN32676 DN40, max measuring range 1.6MPa	
		K05	DIN32676 DN50, max measuring range 1.6MPa	
		K06	ISO2852 DN38, max measuring range 4MPa	
		K07	ISO2852 DN40, max measuring range 4MPa	
		K08	ISO2852 DN51, max measuring range 2.5MPa	
		K09	DIN11851 DN25, max measuring range 2.5MPa	
		K10	DIN11851 DN40, max measuring range 2.5MPa	
		K11	DIN11851 DN50, max measuring range 2.5MPa	
		K12	SMS DN1-1/2", max measuring range 2.5MPa	
		K13	SMS DN2", max measuring range 2.5MPa	
		K14	IDF DN1-1/2", max measuring range 2MPa	
		K15	IDF DN2", max measuring range 2MPa	
		K18	DRD, max measuring range 2.5MPa	
		K20	Plug in tube flush hygienic clamp, max measuring range 2MPa	
Additional options	Separator	-	Detailed specifications as following	
	Process connection accessory	/G1	1.5" Tri-clamp	*
		/G2	2" Tri-clamp	
		/M1	1.5" sealing gasket, material: silicon rubber, process temperature range: -60-200℃	*
		/M2	2" sealing gasket, material: silicon rubber, process temperature range: -60-200℃	
		/Z1	Welding adapter for 1-1/2" tri-clamp	*
		/Z2	Welding adapter for 2" tri-clamp	
	Calibration report	/Q1	Calibration report provided by our company	*
	Approvals (multiple)	/I1	Intrinsic safety certificate, ExiaIICT4, NEPSI	
		/F3	CE certificate	
	Wetted parts treatment	/G1	Ungrease treatment	
		/G2	Electropolishing treatment	

Disclaimer: all the data used in the product description is not legally binding. Relevant technical details may be changed due to further improve

Approvals

Factory certificate

Certification organization	Intertek
Quality management system	ISO9001-2008
Scope of certification	Design and production of pressure transmitter
Registration number	110804039

CE

Certificate organization	ISET
License scope	SMP858 series pressure transmitter
Mark	CE
EMC instruction	2014/30/EU
Standard	EN61326-1: 2013
Registration number	IT051353LG161207

Intrinsic safety certificate

Certification organization name	NEPSI
License scope	SMP858 series pressure transmitter
Explosion-proof mark	ExiaIICT4
Ambient temperature	-40-+60℃
Medium maximum temperature	+120℃
Registration number	GYB16.1965X
Intrinsically safe parameter description	Maximum input voltage: 28VDC
	Maximum input current: 100mA
	Maximum input power: 0.7w
	Maximum internal equivalent parameters Ci(uF): 0
	Maximum internal equivalent parameters Li(mH): 0

Premier TOTAL SOLUTION

Add: Premier Total Solution Co., Ltd.
594, 596 Soi Rama 2 Soi 60,
Samaedam,Bangkhuntien,
Bangkok 10150 Thailand
Tel : 02-4155818-20
E-mail : info@ptssolution.com
Web : www.ptssolution.com
Facebook : DiaphragmSeal

Disclaimer: all the data used in the product description is not legally binding. Relevant technical details may be changed due to further improve