## Product introduction

### Description

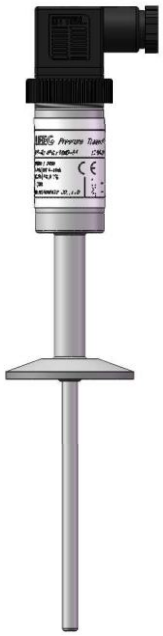

LG200-DRD Flange installation

LG200-DRH Thread installation

LG200 integrated temperature transmitter adopts ASIC&SMT signal transmitting module, optional built-in backlight and button operation LCD display module. The integrated transient voltage terminal satisfy 4 grade standard (difference-mode voltage 2000V, common-mode voltage 4000V), suitable for bad surge voltage occasions. LG200 integrated temperature transmitter provides a flexible and reliable solution for any temperature measurement applications.

### Main parameters

| | |
|---|---|
| Measuring range | -50 - 400℃ |
| Output signal | 4-20mA, 1-5VDC, sensor signal output |
| Reference accuracy | ±0.5% URL |

### Field of application

Temperature measurement

### Measuring medium

The fluid which compatible with wetted parts

Disclaimer: all the data used in the product description is not legally binding. Relevant technical details may be changed due to further improve

## Technical Specifications

### Measuring range and limit

| |
|---|
| -50-400℃, min measuring range 100℃ |
| Above measurement range can be replaced by ℉ or K units. Provide other measuring range according to requirements. Adjust requirements: lower range value (LRV) and upper range value (URV) can be adjusted within the scope of the upper and lower range limit, smallest calibratable span≤ \| URV-LRV \| ≤ upper range limit |

### Standard specifications and reference conditions

| |
|---|
| Test standard: GB/T30121 / IEC60751; Zero based-calibration span, 4-20mA analog output |

### Performance specifications

| |
|---|
| The overall performance including but not limited to 【reference accuracy】, 【environment temperature effects】and other comprehensive error |
| Typical accuracy: ±0.5%URL |
| Stability: superior to ±0.05% URL or 0.1℃/year, whichever is greater@ under the checking condition |

### Reference accuracy

| | | | |
|---|---|---|---|
| Including linearity, hysteresis and repeatability. calibration temperature: 20 ℃ ± 5 ℃ | | | |
| Linear output accuracy | Typical | ±0.5% URL | Full scale |

### Ambient temperature effects(reference accuracy: 22℃)

| |
|---|
| ≤ ±0.005% URL/℃, temperature 22℃ |

### Power supply effects

| |
|---|
| ≤±0.01% URL/V, power supply 24V(refer to full scale output 20mA) |

### Loading effects

| |
|---|
| ≤±0.02% URL/100Ω(refer to full scale output 20mA) |

### Vibration effects

| |
|---|
| According to IEC60068-2-6, 4g/2...100HZ |

### Output signal

| Signal | Type | Output |
|---|---|---|
| 4-20mA | Linearity | Two wire |
| 1-5VDC | Linearity | Three wire |
| Sensor output | Linearity | Two wire, there wire, four wire |

### Insulation resistance

| |
|---|
| ≥ 20MΩ@ reference, 100VDC |

### Power supply

| Items | Operating conditions |
|---|---|
| Standard | 10-30VDC |
| Power consumption | ≤500mW@24VDC，20.8mA |

Disclaimer: all the data used in the product description is not legally binding. Relevant technical details may be changed due to further improve

## Technical Specifications

### Damping time

| |
|---|
| Total damping time constant: equal to the sum of damping time of amplifer and sensor capsule |
| Reaction time: ≤10s@ water flow 0.4m/s, outer diameter: 6mm |

### Environment condition

| Items | Operational condition |
|---|---|
| Working temperature | -40-85℃ |
| Storage temperature | -40-100℃ |
| Working humidity | 0-95%RH |
| Protection class | IP65, IP67 |

### Reaction time(Test standard: IEC60751, 10s@ water flow 0.4m/s)

| Thermal protection tube | | | | |
|---|---|---|---|---|
| Outer diameter | Reaction time | Reducing pipe 5.3mm | Cone shaped tube 6.6mm or 9mm | Straight tube |
| 10mm(wall thickness 1 mm) | t50<br>t90 | 7.5s<br>21s | 11s<br>37s | 18s<br>55s |
| 12mm(wall thickness 1 mm) | t50<br>t90 | 7.5s<br>21s | -<br>- | 18s<br>55s |
| 16mm(wall thickness 1 mm) | t50<br>t90 | -<br>- | 11s<br>37s | 38s<br>125s |

Note: The reaction time above does not include the reaction time of temperature transmitter

### Mounting requirements

| | |
|---|---|
| Mounting direction | None |
| Mounting position | Pipe, tube or others |
| Insertion length* | The smallest insertion length should 8 times outer diameter of thermal protection tube, and the end of the probe should reach or surpass the pivot of the tube. |
| Please consider technique datas and process connection parameters(such as medium flow rate, process pressure and so on) before confirm the insertion length of the transmitter. | |

### Process pressure(The process pressure dured by thermal protection tube changes along with medium temperature, see chart below)

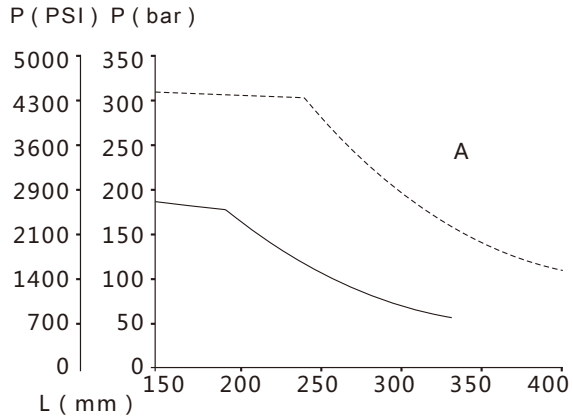


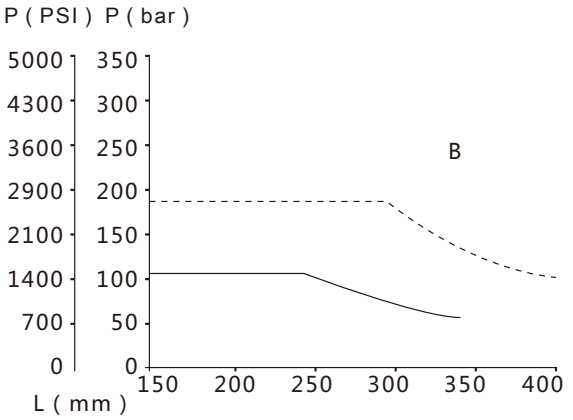


| | | |
|---|---|---|
| ———— Tube diameter 10mm Tube wall thickness 1mm | A:water, T=50℃ | L: Immersion depth |
| - - - - - - - - - - - Tube diameter 12mm Tube wall thickness 2mm | B:superheated steam, T=400℃ | P: process pressure |

Disclaimer: all the data used in the product description is not legally binding. Relevant technical details may be changed due to further improve

## Technical Specifications

Maximum medium flow rate(The maximum medium flow rate dured by thermal protection tube reduces with increases of insertion length, see chart below)

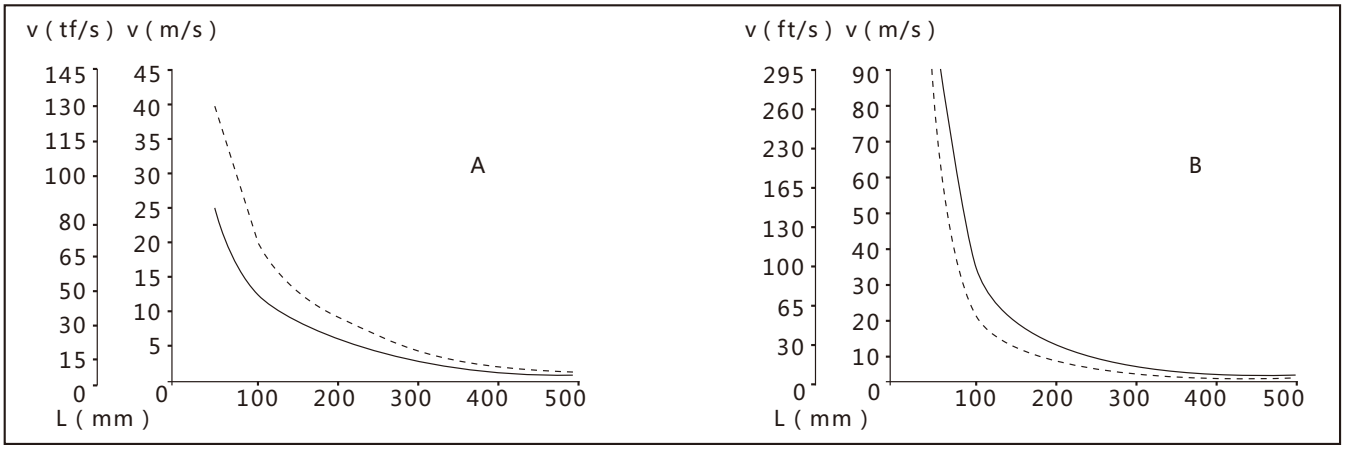


| | | |
|---|---|---|
| ———— Tube diameter 10mm Tube wall thickness 1mm | A:water, T=50℃ | L: immersion depth |
| - - - - - - - - - - - Tube diameter 12mm Tube wall thickness 2mm | B:superheated steam, T=400℃ | V: flow rate |

## EMC environment

| NO. | Test items | Basic standards | Test conditions | Performance level |
|---|---|---|---|---|
| 1 | Radiated interference | GB/T 9254/CISPR22 | 30MHz-1000MHz | OK |
| 2 | Conducted interference (DC power port) | GB/T 9254/CISPR22 | 0.15MHz-30MHz | OK |
| 3 | Electrostatic discharge immunity test (ESD) | GB/T 17626.2/IEC61000-4-2 | 4kV(Contact ),8kV(Air) | B(Note2) |
| 4 | Immunity to radio frequency EM-fields | GB/T 17626.3/IEC61000-4-3 | 10V/m(80MHz-1GHz) | A(Note1) |
| 5 | Power frequency magnetic field Immunity test | GB/T 17626.8/IEC61000-4-8 | 30A/m | A(Note1) |
| 6 | Electrical fast transient / Burst Immunity Test | GB/T 17626.4/IEC61000-4-4 | 2kV(5/50ns,100kHz) | B(Note2) |
| 7 | Surge immunity requirements | GB/T 17626.5/IEC61000-4-5 | 1kV(Line to line)<br>2kV(Line to ground)<br>(1.2us/50us) | B(Note2) |
| 8 | Immunity to conducted disturbances induced by radio frequency fields | GB/T 17626.6/IEC61000-4-6 | 3V(150kHz-80MHz) | A(Note1) |

(Note 1)Performance level A: The preformance within the limits of normal technical specifications.
(Note 2)Performance level B: Temporary reduction or loss of functionality or preformance, it can restore itself. The actual operating conditions, storage and data will not be changed.

Disclaimer: all the data used in the product description is not legally binding. Relevant technical details may be changed due to further improve

## Product selection instruction

### Pressure sensor types

| Code | Nominal value | Description |
|---|---|---|
| R1 | Sensor types | PT100 RTD |

### Transmission module

| Code | Items | Description |
|---|---|---|
| F | Output signal | 4-20mA, power supply: 10-30VDC |
| 1 | | 1-5VDC, power supply: 12-30VDC |
| X | | Sensor signal output, two wire |
| Y | | Sensor signal output, there wire |
| Z | | Sensor signal output, four wire |

### Extension tube selection

| Code | Items | Description |
|---|---|---|
| Q1 | Specifications | None |
| Q2 | | Material: SUS316, length: 50mm, outer diameterΦ12 |
| Q3 | | Material: SUS316, length: 100mm, outer diameterΦ12 |
| Q4 | | Material: SUS316, length: 150mm, outer diameterΦ12 |
| Q5 | | Material: SUS316, length: 200mm, outer diameterΦ12 |

### Extension tube length

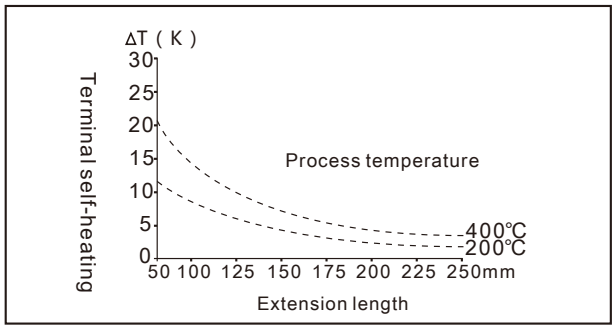


The relation chart of thermal resistance terminal self-heating and process temperature

Terminal temperature= environment temperature+ terminal self-healting

### Electrical connection select instruction

| Code | Description |
|---|---|
| D1 | DIN43650, IP65 |
| H1 | Aviation plug, 4 pin, M12*1, IP67 |

### DIN43650(D1)

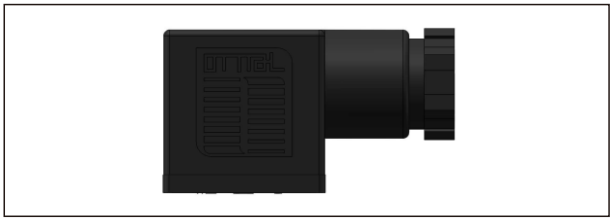

### M12*1, 4 pins, aviation plug(H1)

### Electrical connection(voltage and current signal output)

DIN43650( D 1)

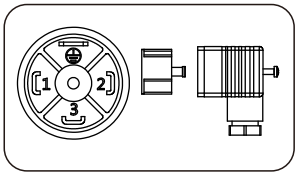


| Label | Two wires | Three wires | Four wires |
|---|---|---|---|
| 1 | Power+ | Power+ | Power+ |
| 2 | Power - | Power- | Power - |
| 3 | | Signal+ | Signal+ |
| ⏚ | | | Signal- |

M12*1, 4 pins, aviation plug(H1)

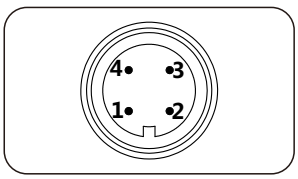


| Label | Two wires | Three wires | Four wires |
|---|---|---|---|
| 1 | Power+ | Power+ | Power+ |
| 2 | | | Power - |
| 3 | | Signal+ | Signal+ |
| 4 | Power - | Power- | Signal- |

Disclaimer: all the data used in the product description is not legally binding. Relevant technical details may be changed due to further improve

## Product selection instruction

### Electrical connection accessory (voltage and current signal output)

#### Aviation plug straighter(J1)

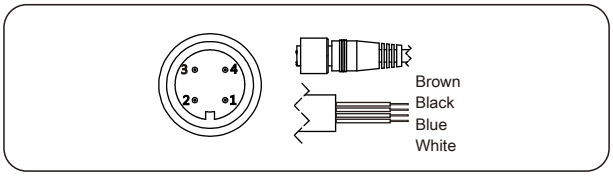


| label | Two wires | Three wires | Four wires |
|---|---|---|---|
| 1/Brown | Power+ | Power+ | Power+ |
| 2/White | | | Signal- |
| 3/Blue | | Signal+ | Signal+ |
| 4/Black | Power- | Power- | Power- |

#### Aviation plug elbow (J2)

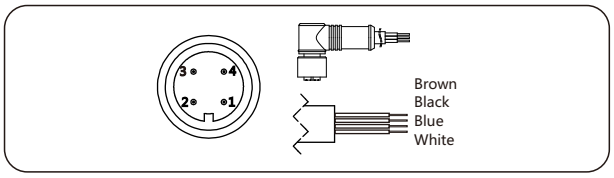


| label | Two wires | Three wires | Four wires |
|---|---|---|---|
| 1/Brown | Power+ | Power+ | Power+ |
| 2/White | | | Signal- |
| 3/Blue | | Signal+ | Signal+ |
| 4/Black | Power- | Power- | Power- |

#### Aviation plug straighter(J4)

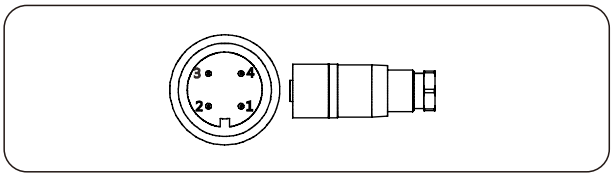


| label | Two wires | Three wires | Four wires |
|---|---|---|---|
| 1 | Power+ | Power+ | Power+ |
| 2 | | | Signal- |
| 3 | | Signal+ | Signal+ |
| 4 | Power- | Power- | Power- |

#### Aviation plug elbow(J5)

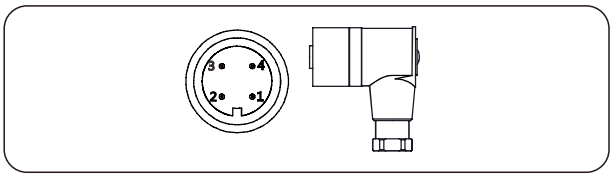


| label | Two wires | Three wires | Four wires |
|---|---|---|---|
| 1 | Power+ | Power+ | Power+ |
| 2 | | | Signal- |
| 3 | | Signal+ | Signal+ |
| 4 | Power- | Power- | Power- |

### Electrical connetion(sensor signal output)

#### DIN43650( D 1)

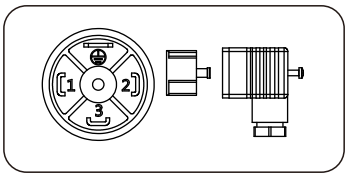


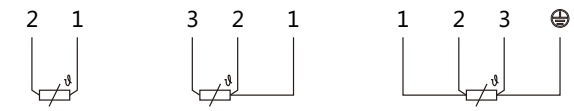


#### M12*1, 4-pins, aviation plug(H1), aviation plug straighter(J1, J4), aviation plug elbow (J2, J5)

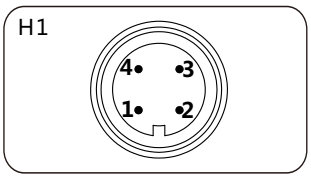


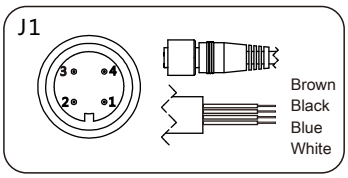


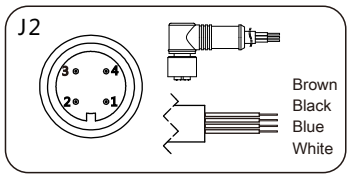


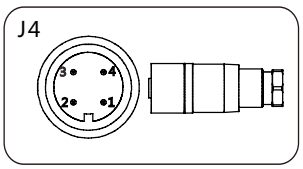


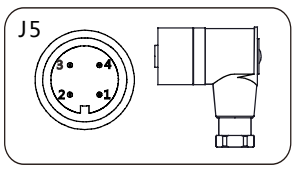


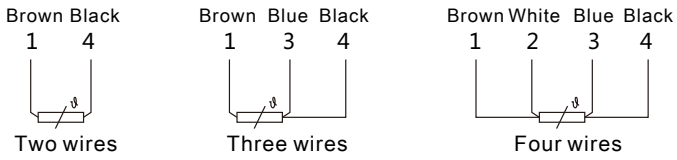


Disclaimer: all the data used in the product description is not legally binding. Relevant technical details may be changed due to further improve

## Product selection instruction

### Process connection select instruction

| Code | Items | Description |
|---|---|---|
| G | Mounting type | Fixed process connection mounting |
| H | | Movable process connection mounting |
| 4 | Material | SUS304 |
| 6 | | SUS316 |
| M01 | Process connection specifications | M20*1.5(M), GB/T192-2003 |
| G01 | | G1/2(M), EN837 |
| R01 | | 1/2-14NPT(M), ANSI/ASME B1.20.1 |
| K01 | | Tri-Clamp 1-1/2" |
| K02 | | Tri-Clamp 2" |
| H01 | | Flange HG/T20592-2009 DN50PN10 |
| H02 | | Flange HG/T20592-2009 DN25PN10 |

### Insertion probe select instruction

| Code | Items | Description |
|---|---|---|
| D1 | Outer diameter | Diameter: 6mm, probe material is same as process connection material |
| D2 | | Diameter: 8mm, probe material is same as process connection material |
| D3 | | Diameter: 10mm, probe material is same as process connection material |
| D4 | | Diameter: 12mm, probe material is same as process connection material |
| D5 | | Diameter: 16mm, probe material is same as process connection material |
| LXXXX | Insertion length | Customized insertion length: 0 < LXXXX< 3000mm, samples: 80mm=L0080, the minimum gap is 50mm of customized insertion length. Default insertion length includes thread specifications |

Disclaimer: all the data used in the product description is not legally binding. Relevant technical details may be changed due to further improve

## Product drawing and dimension

Drawing and dimension (thread) with DIN43650 (D1) and without extension tube(unit: mm)

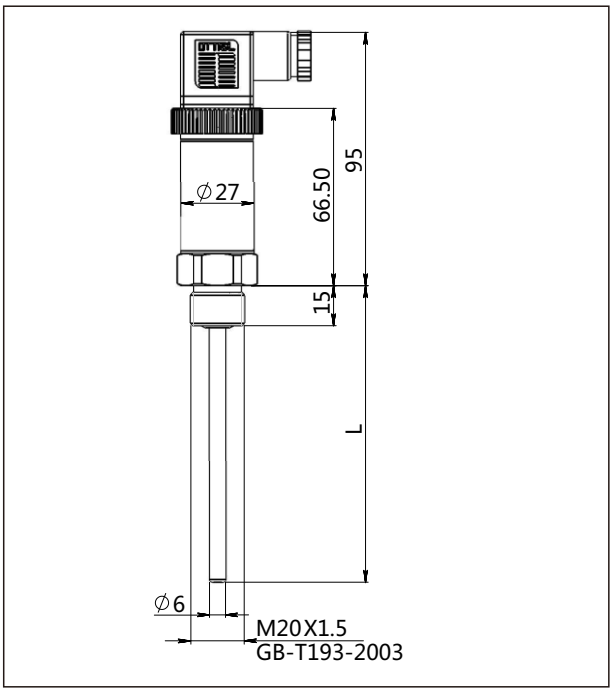


Drawing and dimension (thread) with aviation plug (H1) and without extension tube( unit: mm)

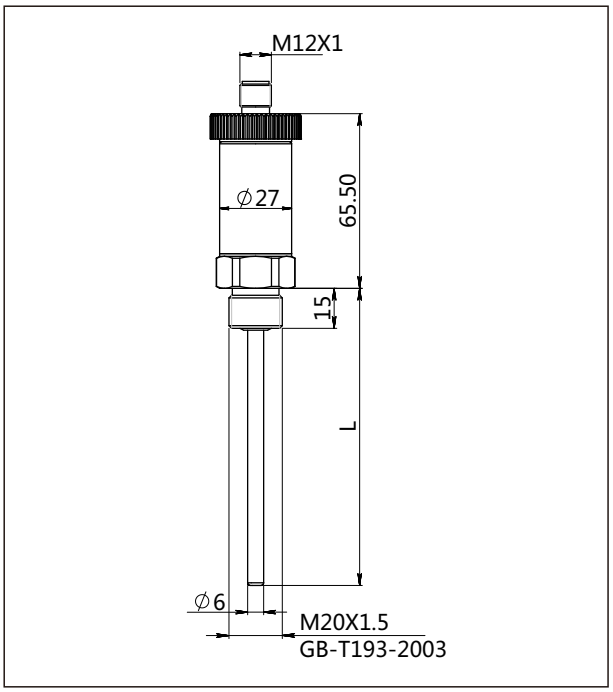


Drawing and dimension (thread) with DIN43650 (D1) and extension tube(unit: mm)

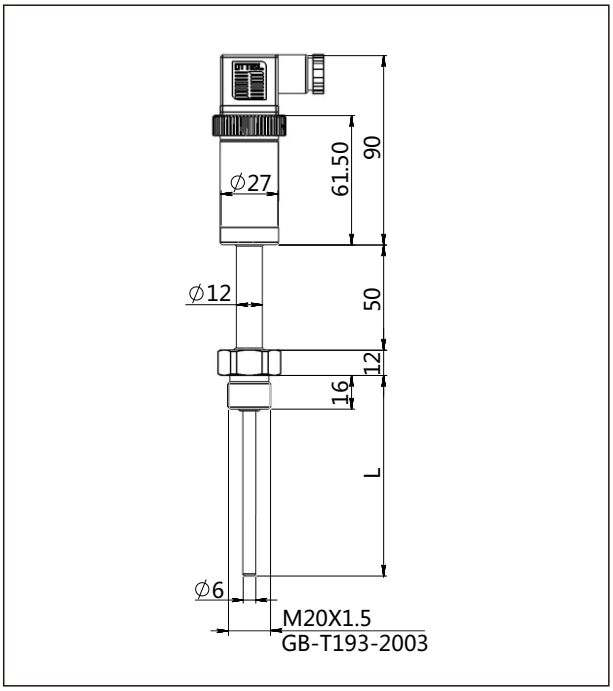


Drawing and dimension (thread) with aviation plug (H1) and extension tube(unit: mm)

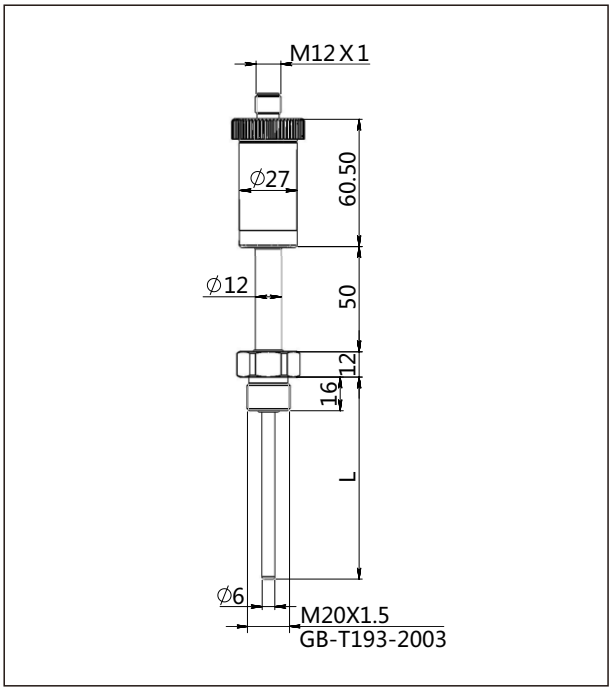


Disclaimer: all the data used in the product description is not legally binding. Relevant technical details may be changed due to further improve

## Product drawing and dimension

### Drawing and dimension (flange) with DIN43650 (D1) and extension tube (unit:mm)

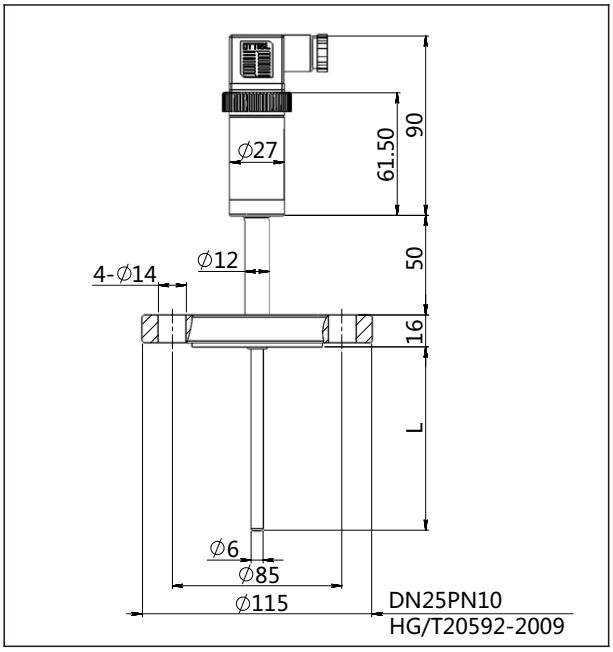


### Drawing and dimension (tri-Clamp) with DIN43650 (D1) and extension tube ( unit:mm)

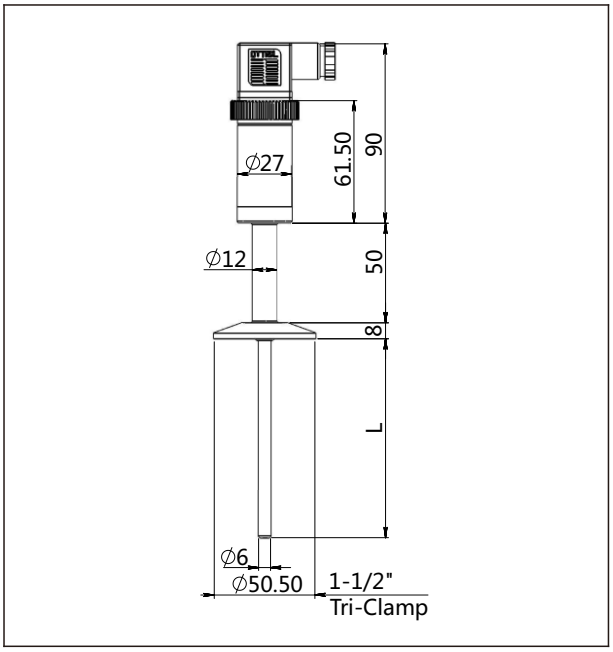


### Process connection(M01) (unit: mm)

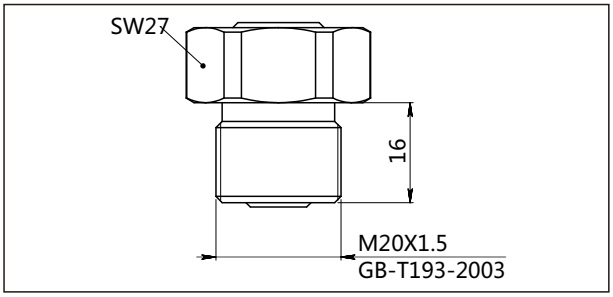


### Process connection(G01) (unit: mm)

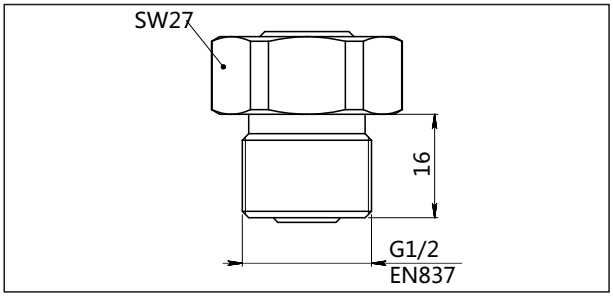


### Process connection(R01) (unit: mm

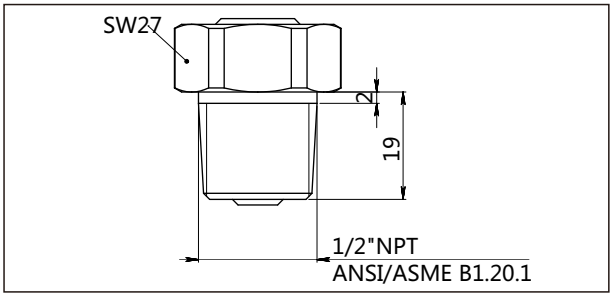


### Process connection(K01-K02) (unit: mm)

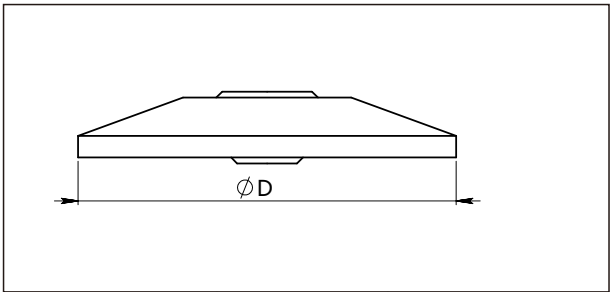


| Standard | Specification | Size(ΦD) |
|---|---|---|
| Tri-Clamp | 1-1/2" | 50.5 |
| Tri-Clamp | 2" | 64 |

Disclaimer: all the data used in the product description is not legally binding. Relevant technical details may be changed due to further improve

## Product drawing and dimension

### Process connection(H01-H02) (unit: mm)

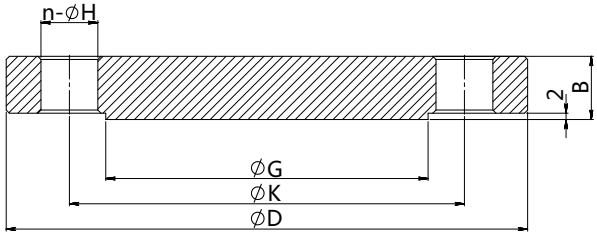


| Standard | Specification | Outer diameter(ΦD) | Thickness(B) |
|---|---|---|---|
| HG/T20592-2009 | DN50PN10-PN40 | 165 | 20 |
| HG/T20592-2009 | DN25PN10-PN40 | 115 | 16 |
| Hole circle(ΦK) | Raised-face diameter(ΦG) | Hole diameter(ΦH) | Number(n) |
| 125 | 102 | 18 | 4 |
| 85 | 68 | 14 | 4 |

### Aviation female plug straighter(J1)(unit: mm)

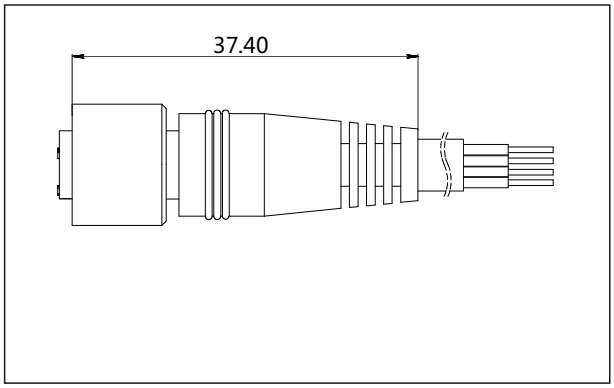


### Aviation female plug elbow(J2)(unit:mm)

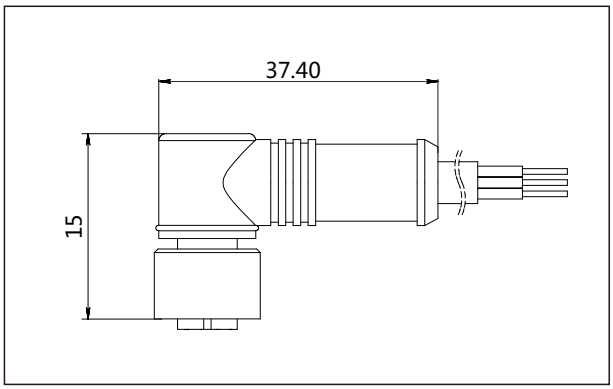


### Aviation female plug straighter(J4) (unit: mm)

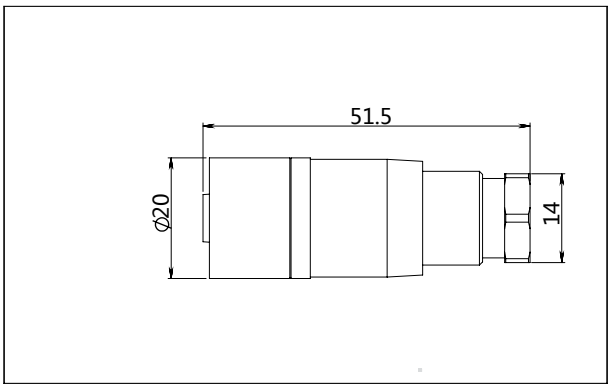


### Aviation female plug elbow(J5) (unit: mm)

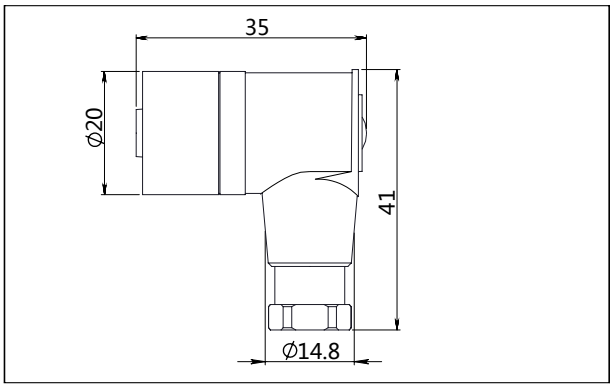


Disclaimer: all the data used in the product description is not legally binding. Relevant technical details may be changed due to further improve

## Ordering information chapter

| Item | Parameters | Code | Instruction | (*) fast delivery available |
|---|---|---|---|---|
| | Model | LG200-DRD | Integrated thermal resistance temperature transmitter | * |
| | | LG200-DRH | Integrated thermal resistance temperature transmitter | * |
| Sensor | Separator | - | Detailed specifications as following | |
| | Pressure range code | R1 | PT100 RTD | * |
| Electrical connection | Separator | - | Detailed specifications as following | |
| | Electrical connection | D1 | DIN43650, IP65 | * |
| | | H1 | Aviation plug, M12*1, 4-pins, IP67 | * |
| | Cable entry protector | R0 | None | |
| Output | Separator | - | Detailed specifications as following | |
| | Output signal | F | 4-20mA, power supply: 10-30VDC | * |
| | | 1 | 1-5VDC, power supply: 12-30VDC | |
| | | X | Sensor signal output, two wire | |
| | | Y | Sensor signal output, three wire | * |
| | | Z | Sensor signal output, four wire | |
| Tube | Separator | - | Detailed specifications as following | |
| | Tube | 53 | The length of stainless steel tube:53mm | |
| | | 30 | The length of stainless steel tube:30mm (only available for sensor signal output) | |
| Extension tube | Separator | - | Detailed specifications as following | |
| | Extension tube length | Q1 | None(suitable temperature: -40℃-85℃) | |
| | | Q2 | Material: SUS316, length: 50mm, outer diameter:Φ12 | * |
| | | Q3 | Material: SUS316, length: 100mm, outer diameterΦ12 | |
| | | Q4 | Material: SUS316, length: 150mm, outer diameterΦ12 | |
| | | Q5 | Material: SUS316, length: 200mm, outer diameterΦ12 | |
| Process connection | Separator | - | Detailed specifications as following | |
| | Mounting type | G | Fixed process connection mounting | * |
| | | H | Movable process connection mounting | |
| | Material | 4 | SUS304 | * |
| | | 6 | SUS316 | |
| | Specification | M01 | M20*1.5(M),GB/T192-2003 | * |
| | | G01 | G1/2(M), EN837 | * |
| | | R01 | 1/2-14NPT(M), ANSI/ASME B1.20.1 | * |
| | | K01 | Tri-Clamp 1-1/2" | * |
| | | K02 | Tri-Clamp 2" | * |
| | | H01 | Flange HG/T20592-2009 DN50PN10 | |
| | | H02 | Flange HG/T20592-2009 DN25PN10 | |

Disclaimer: all the data used in the product description is not legally binding. Relevant technical details may be changed due to further improve

## Ordering information chapter

| Insertion probe | Separator | - | Detailed specifications as following | |
|---|---|---|---|---|
| | Outer diameter | D1 | Diameter: 6mm, probe material is same as process connection material | * |
| | | D2 | Diameter: 8mm, probe material is same as process connection material | * |
| | | D3 | Diameter: 10mm, probe material is same as process connection material | * |
| | | D4 | Diameter: 12mm, probe material is same as process connection material | |
| | | D5 | Diameter: 16mm, material: SUS304 | |
| | Insertion length | LXXXX | Customized insertion length: 0 < LXXXX< 3000mm, samples: 80mm=L0080, 150mm=L0150 | |
| Additional options | Separator | - | Detailed specifications as following | |
| | Electrical connection accessory | /J1 | Aviation female plug (straighter) with 2m cable, 4 pin, M12*1, IP67 | |
| | | /J2 | Aviation female plug (elbow) with 2m cable, 4 pin, M12*1, IP67 | |
| | | /J4 | Aviation female plug (straighter) without able, 4 pin, M12*1, IP67 | * |
| | | /J5 | Aviation female plug (elbow) without cable, 4 pin, M12*1, IP67 | |
| | Process connection accessory | /G1 | 1.5" tri-clamp | * |
| | | /G2 | 2" tri-clamp | |
| | | /M1 | 1.5" sealing gasket, silicone rubber, process temperature: -60-200℃ | * |
| | | /M2 | 2" sealing gasket, silicone rubber, process temperature: -60-200℃ | |
| | | /Z1 | Welding adapter, Tri-Clamp1-1/2" | * |
| | | /Z2 | Welding adapter, Tri-Clamp2" | |
| | Calibration report | /Q1 | Calibration report provided by our company | |
| | Wetted parts treatment | /G1 | Ungrease treatment | |
| | | /G2 | Electropolishing treatment | |

scan & follow LEEG wechat

check website for more info

LEEG SENSING TOMORROW

Shanghai LEEG Instruments Co.,Ltd

ADD: No.100 Duhui Road, Minhang District, Shanghai China
Postcode:201109
Tel: (86) 21-31261976
Fax: (86) 21-31261975
E-mail:sales@leegsensor.com info@leegsensor.com
Web: www.leegsensor.com

Disclaimer: all the data used in the product description is not legally binding. Relevant technical details may be changed due to further improve