Product introduction

Description

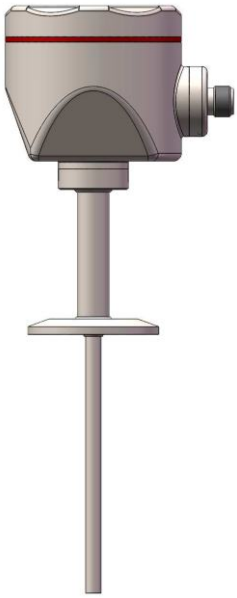

Horizontal installation with tri-clamp

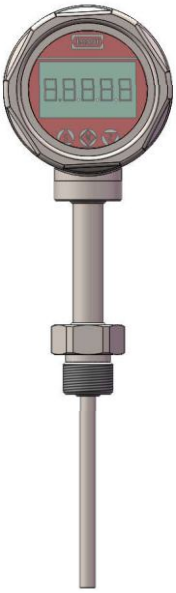

Vertical installation with thread

LG200 integrated temperature transmitter adopts ASIC&SMT signal transmitting module, optional built-in backlight and button operation LCD display module. The integrated transient voltage terminal satisfy 4 grade standard (difference-mode voltage 2000V, common-mode voltage 4000V), suitable for bad surge voltage occasions. LG200 integrated temperature transmitter provides a flexible and reliable solution for any temperature measurement applications.

Main parameters

Measuring range	-50 - 400℃
Output signal	4-20mA
Reference accuracy	±0.5% URL

Field of application

Temperature measurement

Measuring medium

The fluid which compatible with wetted parts

Disclaimer: all the data used in the product description is not legally binding. Relevant technical details may be changed due to further improve

Technical Specifications

Measuring range and limit

-50-400℃, min measuring range 100℃
The unit of the measuring range above can be converted into ℉ or K. Provide other measuring range according to requirements. Adjust requirements: lower range value (LRV) and upper range value (URV) can be adjusted within the scope of the upper and lower range limit, minimum measuring range≤| URV - LRV |≤maximum measuring range

Standard specifications and reference conditions

Test standard: GB/T30121 / IEC60751; Zero based-calibration span, 4-20mA analog output

Performance specifications

The overall performance including but not limited to 【reference accuracy】, 【environment temperature effects】and other comprehensive error
Typical accuracy: ±0.5%URL
Stability: superior to ±0.05% URL or 0.1℃/year, whichever is greater@ under the checking condition

Reference accuracy

Including linearity, hysteresis and repeatability. calibration temperature: 20℃ ± 5℃			
Linear output accuracy	Typical	±0.5% URL	Full scale

Ambient temperature effects(reference accuracy: 22℃)

≤ ±0.005% URL/℃, temperature 22℃

Power supply effects

≤±0.01% URL/V, power supply 24V(refer to full scale output 20mA)

Loading effects

≤±0.02% URL/100Ω(refer to full scale output 20mA)

Vibration effects

According to IEC60068-2-6 , 4g/2...100HZ

Output signal

Signal	Type	Output
4-20mA	Linearity	Two wire

Insulation resistance

≥20M Ω@ reference, 100VDC

Power supply

Items	Operating conditions
Power consumption	≤500mW@24VDC, 20.8mA

Damping time

Total damping time constant: equal to the sum of damping time of amplifer and sensor capsule
Reaction time: ≤10s@ water flow 0.4m/s, outer diameter: 6mm

Disclaimer: all the data used in the product description is not legally binding. Relevant technical details may be changed due to further improve

Technical Specifications

Environment condition

Items	Operational condition
Working temperature	-40-85℃, integrated LCD display: -20-70℃
Storage temperature	-40-100℃, integrated LCD display: -20-70℃
Working humidity	0-95%RH
Protection class	Stainless steel housing with aviation plug, IP67

Reaction time(Test standard: IEC60751, 10s@ water flow 0.4m/s)

Thermal protection tube				
Outer diameter	Reaction time	Reducing pipe 5.3mm	Cone-shaped tube 6.6mm or 9mm	Straight tube
10mm(wall thickness 1 mm)	t50 t90	7.5s 21s	11s 37s	18s 55s
12mm(wall thickness 1 mm)	t50 t90	7.5s 21s	- -	18s 55s
16mm(wall thickness 1 mm)	t50 t90	- -	11s 37s	38s 125s

Note: The reaction time above do not include the reaction time of temperature transmitter.

Mounting requirements

Mounting direction	None
Mounting position	Pipe、tube or others
Insertion length*	The smallest insertion length should 8 times outer diameter of thermal protection tube, and the end of the probe should reach or surpass the pivot of the tube.
*Please consider technique datas and process connection parameters(such as medium flow rate、process pressure and so on) before confirm the insertion length of the transmitter.	

Process pressure (The process pressure dured by thermal protection tube changes along with medium temperature, see chart below)

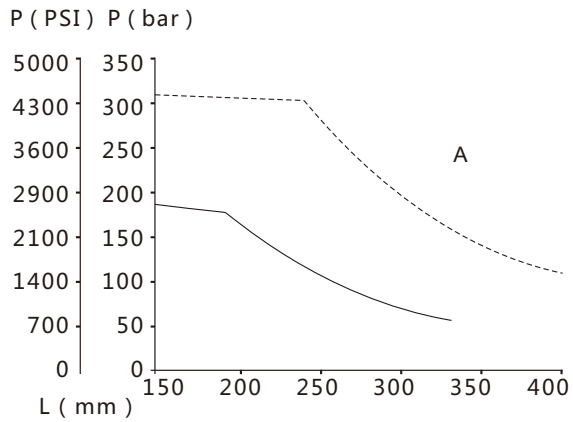

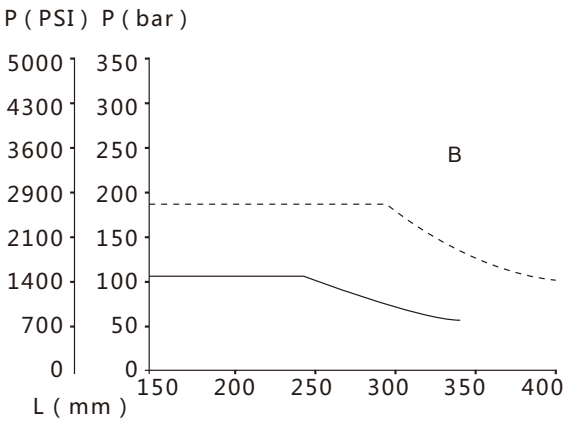

———— Tube diameter 10mm	tube wall thickness 1mm	A: water, T=50℃	L: immersion depth
- - - - - - - - - - - Tube diameter 12mm	tube wall thickness 2mm	B: superheated steam, T=400℃	P: process pressure

Disclaimer: all the data used in the product description is not legally binding. Relevant technical details may be changed due to further improve

Technical Specifications

Maximum medium flow rate(The maximum medium flow rate dured by thermal protection tube reduces with insertion length increases, see chart below)

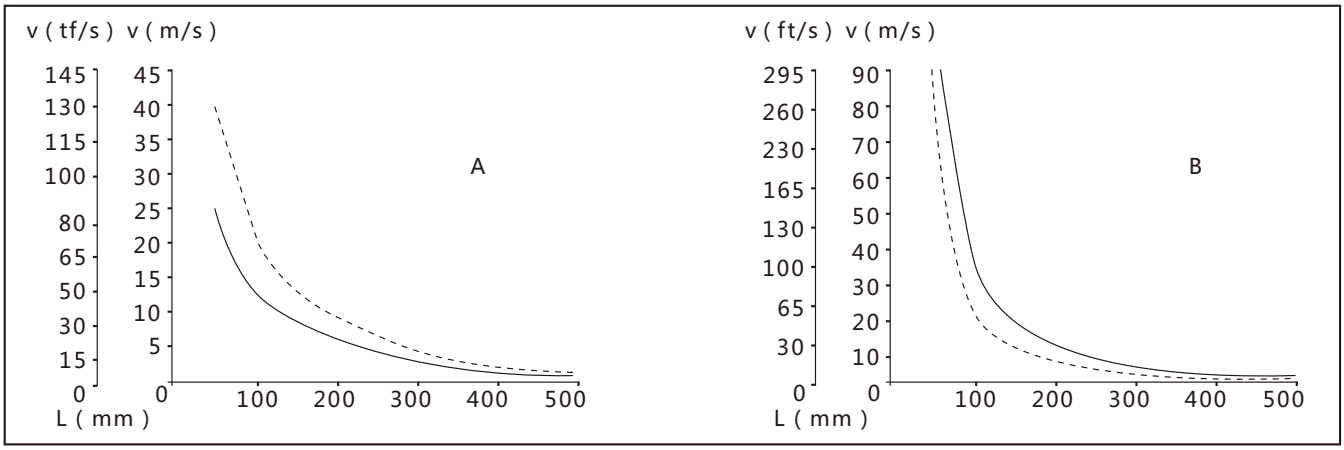

———— Tube diameter 10mm	tube wall thickness 1mm	A: water, T=50℃	L: immersion depth
- - - - - - - - - - Tube diameter 12mm	tube wall thickness 2mm	B: superheated steam, T=400℃	V: flow rate

EMC environment(not RS485 signal output)

NO.	Test items	Basic standards	Test conditions	Performance level
1	Radiated interference	GB/T 9254/CISPR22	30MHz-1000MHz	OK
2	Conducted interference (DC power port)	GB/T 9254/CISPR22	0.15MHz-30MHz	OK
3	Electrostatic discharge immunity test (ESD)	GB/T 17626.2/IEC61000-4-2	4kV(Contact),8kV(Air)	B(Note2)
4	Immunity to radio frequency EM-fields	GB/T 17626.3/IEC61000-4-3	10V/m(80MHz-1GHz)	A(Note1)
5	Power frequency magnetic field Immunity test	GB/T 17626.8/IEC61000-4-8	30A/m	A(Note1)
6	Electrical fast transient / Burst Immunity Test	GB/T 17626.4/IEC61000-4-4	2kV(5/50ns,100kHz)	B(Note2)
7	Surge immunity requirements	GB/T 17626.5/IEC61000-4-5	1kV(Line to line) 2kV(Line to ground) (1.2us/50us)	B(Note2)
8	Immunity to conducted disturbances induced by radio frequency fields	GB/T 17626.6/IEC61000-4-6	3V(150kHz-80MHz)	A(Note1)

(Note 1)Performance level A: The preformance within the limits of normal technical specifications.
(Note 2)Performance level B: Temporary reduction or loss of functionality or preformance, it can restore itself. The actual operating conditions, storage and data will not be changed.

Disclaimer: all the data used in the product description is not legally binding. Relevant technical details may be changed due to further improve

Product selection instruction

Pressure sensor types

Code	Nominal value	Description
R1	Sensor types	PT100 RTD

Transmission module

Code	Items	Description
F	Output signal	4-20mA two wire, power supply: 10-30VDC
C	Display	With LCD display
A		Without display

Display module(C)

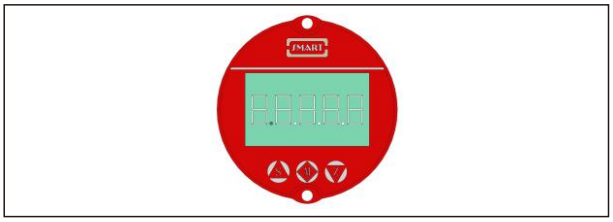

Extension tube selection

Code	Items	Description
Q1	Specifications	None
Q2		Material: SUS316, length: 50mm, outer diameter: Φ12
Q3		Material: SUS316, length: 100mm, outer diameter: Φ12
Q4		Material: SUS316, length: 150mm, outer diameter: Φ12
Q5		Material: SUS316, length: 200mm, outer diameter: Φ12

Extension tube length

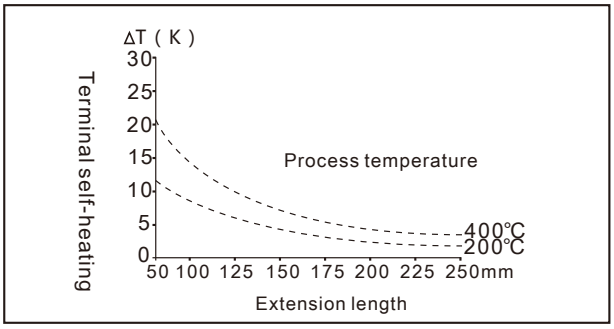

The relation chart of thermal resistance terminal self-heating and process temperature

Terminal temperature= environment temperature+ terminal self-healting

Electrical connection

Code	Item	Description
F1	Electrical connection	Stainless steel terminal, aviation plug M12*1 (4 pin) (H2), IP67, vertical mounting
F2		Stainless steel terminal, aviation plug M12*1 (4 pin) (H2), IP67, horizontal mounting

Housing(F1)

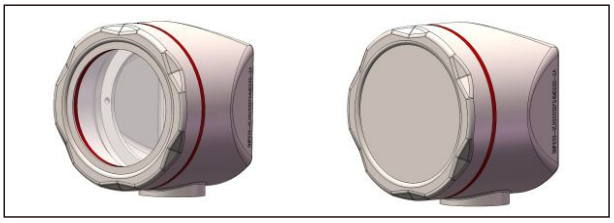

Housing(F2)

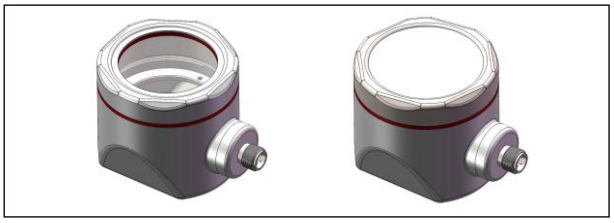

Disclaimer: all the data used in the product description is not legally binding. Relevant technical details may be changed due to further improve

Product selection instruction

Aviation plug, M12*1, 4 pin(H2)

Electrical connection

Aviation plug, M12*1, 4 pin(H2)

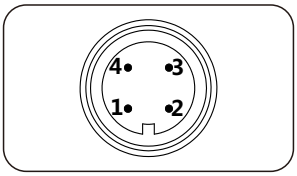

Label	Two wires
1	Power+
2	
3	
4	Power-

Electrical connection accessory

Aviation plug straighter(J1)

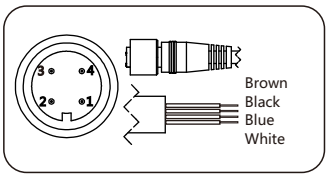

Label	Two wires
1/Brown	Power+
2/White	
3/Blue	
4/Black	Power-

Process connection select instruction

Code	Items	Description
G	Mounting type	Fixed process connection mounting
H		Movable process connection mounting
4	Material	SUS304
6		SUS316
M01	Process connection specifications	M20*1.5(M),GB/T192-2003
G01		G1/2(M), EN837
R01		1/2-14NPT(M), ANSI/ASME B1.20.1
K01		Tri-Clamp 1-1/2"
K02		Tri-Clamp 2"

Aviation plug elbow (J2)

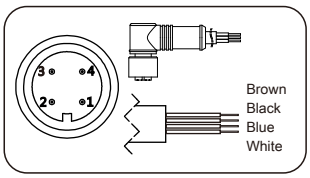

Label	Two wires
1/Brown	Power+
2/White	
3/Blue	
4/Black	Power-

Aviation plug straighter(J4)

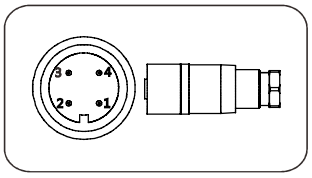

Label	Two wires
1	Power+
2	
3	
4	Power -

Aviation plug elbow(J5)

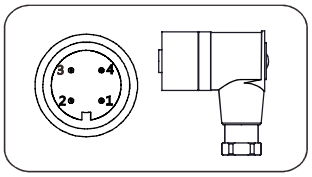

Label	Two wires
1	Power+
2	
3	
4	Power -

Insertion probe select instruction

Code	Items	Description
D1	Outer diameter	Diameter: 6mm, probe material is same as process connection material
D2		Diameter: 8mm, probe material is same as process connection material
D3		Diameter: 10mm, probe material is same as process connection material
D4		Diameter: 12mm, probe material is same as process connection material
D5		Diameter: 16mm, probe material is same as process connection material
LXXXX	Insertion length	Customized insertion length: 0 < LXXXX< 3000mm, samples: 200mm=L0200, the minimum gap is 50mm of customized insertion length. Default insertion length includes thread specifications

Disclaimer: all the data used in the product description is not legally binding. Relevant technical details may be changed due to further improve

Product drawing and dimension

Drawing and dimension (Tri-Clamp) with display(C) / without display (A) vertical installation(F1) (unit:mm)

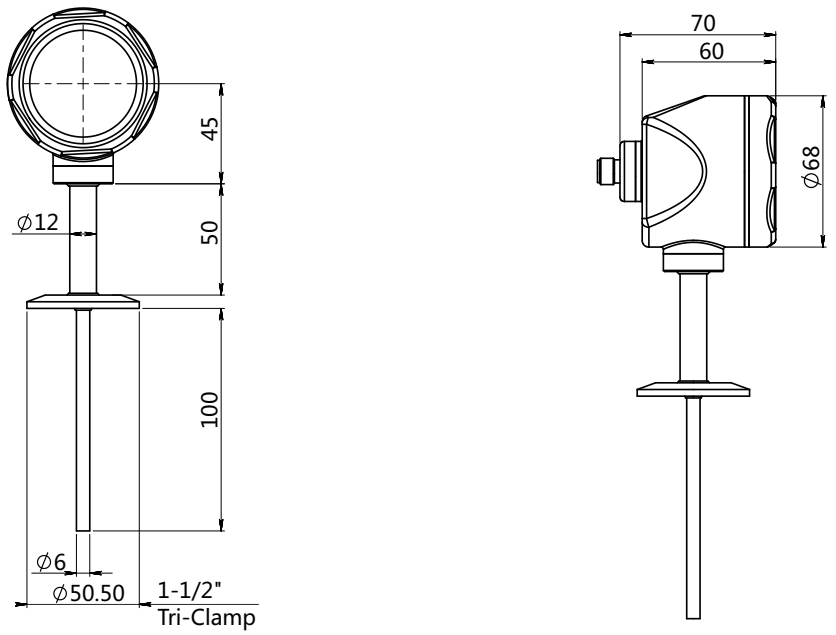

Weight: about 510g

Drawing and dimension (Thread) with display(C) / without display (A) vertical installation(F1) (unit:mm)

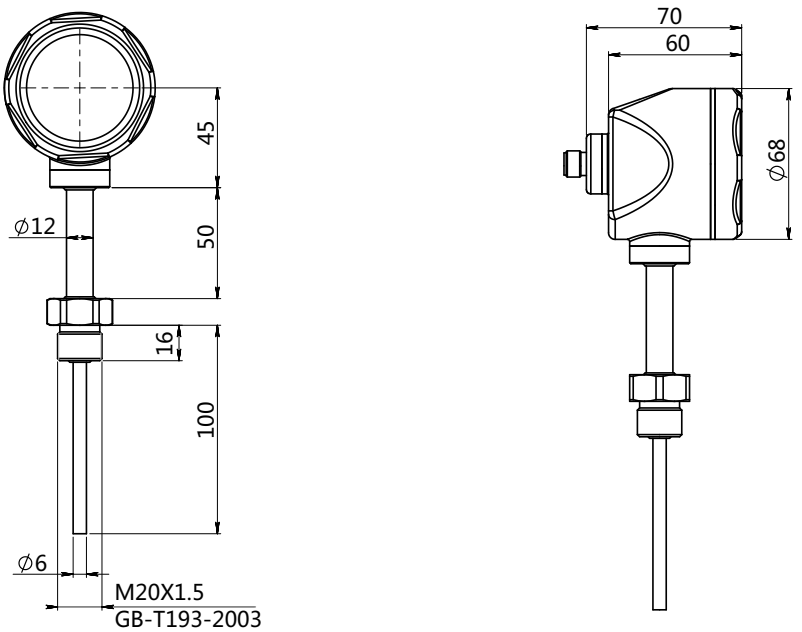

Weight: about 540g

Disclaimer: all the data used in the product description is not legally binding. Relevant technical details may be changed due to further improve

Product drawing and dimension

Drawing and dimension (Tri-Clamp) with display(C) / without display (A) horizontal installation(F2) (unit:mm)

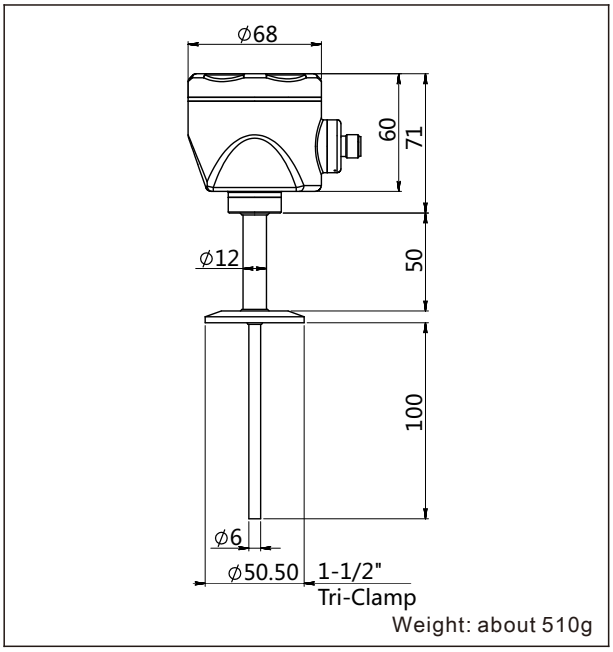

Drawing and dimension (Thread) with display(C) / without display (A) horizontal installation(F2) (unit:mm)

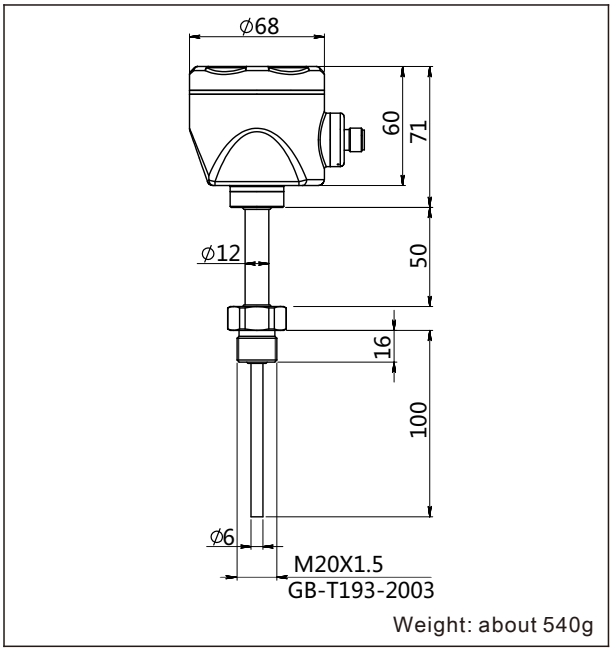

Process connection(M01) (unit: mm)

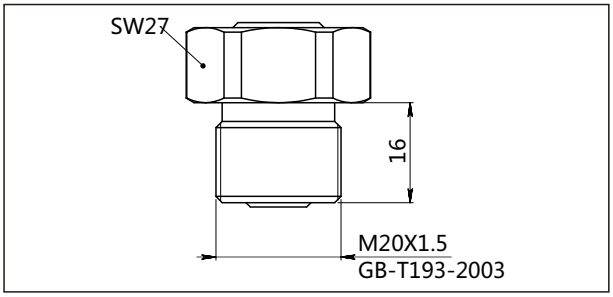

Process connection(G01) (unit: mm)

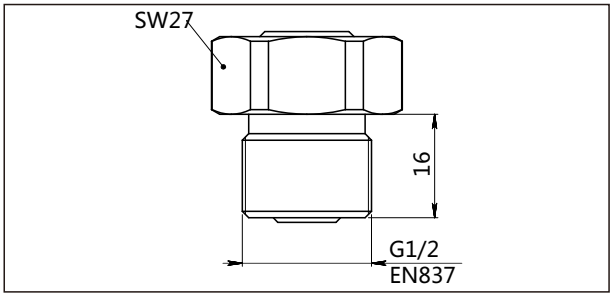

Process connection(R01) (unit: mm)

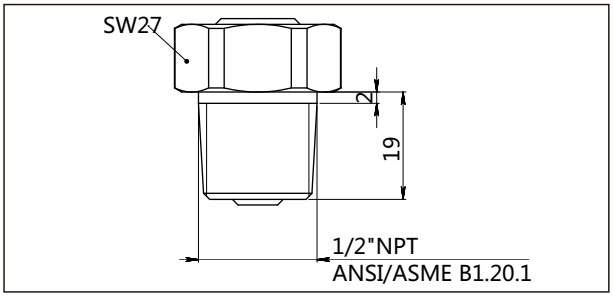

Process connection(K01-K02) (unit: mm)

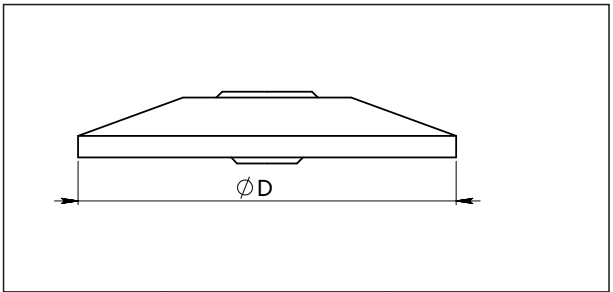

Standard	Specification	Size(ΦD)
Tri-Clamp	1-1/2"	50.5
Tri-Clamp	2"	64

Disclaimer: all the data used in the product description is not legally binding. Relevant technical details may be changed due to further improve

Product drawing and dimension

Aviation female plug straighter(J1) (unit: mm)

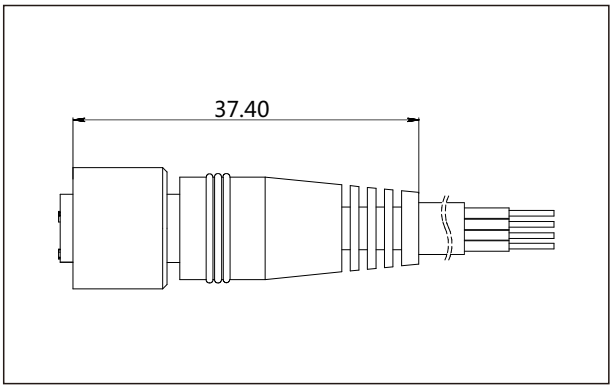

Aiviation female plug elbow(J2) (unit: mm)

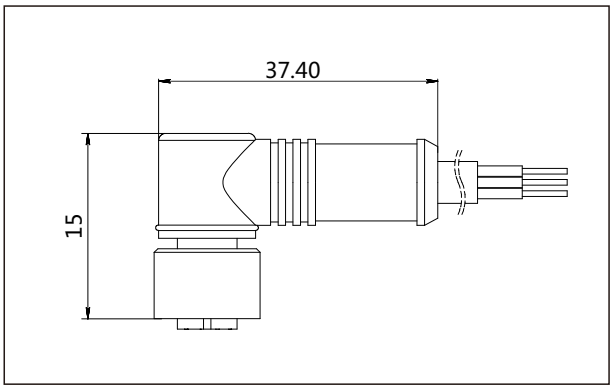

Tri-Clamp(G1-G2) (unit: mm)

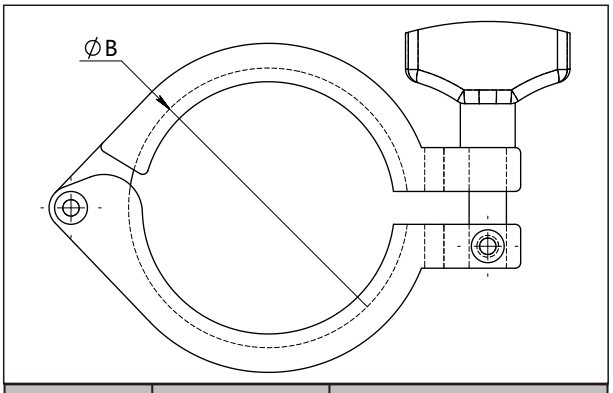

Standard	Specification	Size(ΦB)
Tri-Clamp	1-1/2"	53.9
Tri-Clamp	2"	67.4

Sealing gasket(M1-M2) (unit: mm)

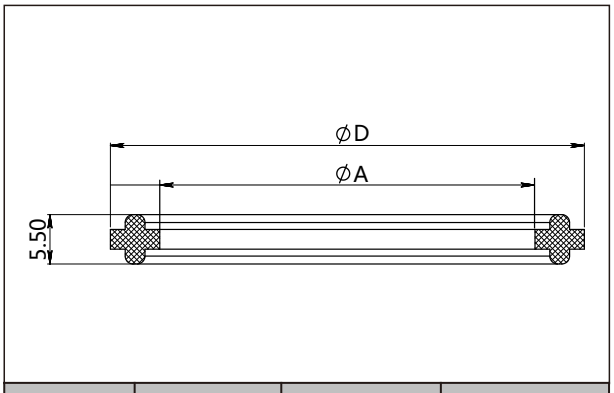

Standard	Specification	Size(ΦD)	Size(ΦA)
Tri-Clamp	1-1/2"	50.5	35
Tri-Clamp	2"	64	47.8

Welding adapter (Z1-Z2)(unit: mm)

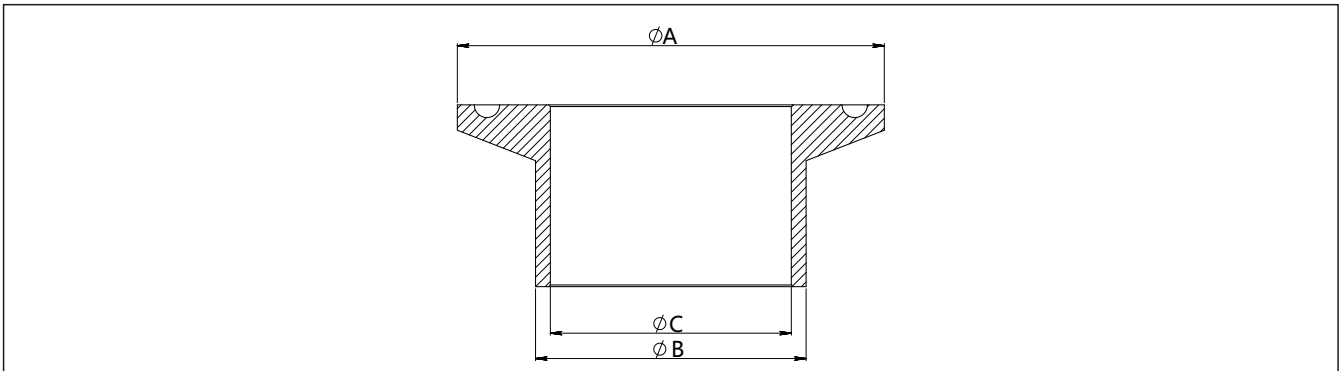

Standard	Specification	Size(ΦA)	Size(ΦB)	Size(ΦC)
Tri-Clamp	1-1/2"	50.5	38	35.6
Tri-Clamp	2"	64	51	48.6

Disclaimer: all the data used in the product description is not legally binding. Relevant technical details may be changed due to further improve

Ordering information chapter

Item	Parameters	Code	Instruction	(*) Fast delivery available
	Model	LG200-FRF	Integrated thermal resistance tepmperature transmitter	
Sensor	Separator	-	Detailed specifications as following	
	Pressure range code	R1	PT100 RTD	*
Electrical connection	Separator	-	Detailed specifications as following	
	Electrical connection	F1	Stainless steel terminal, aviation plug M12*1 (4 pin) (H2), IP67, vertical mounting	*
		F2	Stainless steel terminal, aviation plug M12*1 (4 pin) (H2), IP67, horizontal mounting	*
	Cable entry protector	R0	None	
Output	Separator	-	Detailed specifications as following	
	Output signal	F	4-20mA two wire, power supply: 10-30VDC	*
	Display	C	With LCD display	*
		A	Without display	
Extension pipe	Separator	-	Detailed specifications as following	
	Extension pipe length	Q1	None(suitable temperature: -40℃-85℃)	
		Q2	Material: SUS316, length: 50mm, outer diameter: Φ12	*
		Q3	Material: SUS316, length: 100mm, outer diameter: Φ12	
		Q4	Material: SUS316, length: 150mm, outer diameter: Φ12	
		Q5	Material: SUS316, length: 200mm, outer diameter: Φ12	
Process connection	Separator	-	Detailed specifications as following	
	Mounting type	G	Fixed process connection mounting	*
		H	Movable process connection mounting	
	Material	4	SUS304	*
		6	SUS316	
	Specification	M01	M20*1.5(M),GB/T192-2003	*
		G01	G1/2(M), EN837	*
		R01	1/2-14NPT(M), ANSI/ASME B1.20.1	*
		K01	Tri-Clamp 1-1/2"	*
		K02	Tri-Clamp 2"	*
Insertion probe	Separator	-	Detailed specifications as following	
	Outer diameter	D1	Diameter: 6mm, probe material is same as process connection material	*
		D2	Diameter: 8mm, probe material is same as process connection material	*

Disclaimer: all the data used in the product description is not legally binding. Relevant technical details may be changed due to further improve

Ordering information chapter

		D3	Diameter: 10mm, probe material is same as process connection material	*
		D4	Diameter: 12mm, probe material is same as process connection material	
		D5	Diameter: 16mm, material: SUS304	
	Insertion length	LXXXX	Customized insertion length: 0 < LXXXX< 3000mm, samples: 80mm=L0080, 150mm=L0150	
Additional options	Separator	-	Detailed specifications as following	
	Electrical connection accessory	/J1	Aviation female plug (straighter) with 2m cable, 4 pin, M12*1, IP67	
		/J2	Aviation female plug (elbow) with 2m cable, 4 pin, M12*1, IP67	
		/J4	Aviation female plug (straighter) without able, 4 pin, M12*1, IP67	*
		/J5	Aviation female plug (elbow) without cable, 4 pin, M12*1, IP67	
	Process connection accessory	/G1	1.5" tri-clamp	*
		/G2	2" tri-clamp	
		/M1	1.5" sealing gasket, silicone rubber, process temperature: -60-200℃	*
		/M2	2" sealing gasket, silicone rubber, process temperature: -60-200℃	
		/Z1	Welding adapter, Tri-Clamp1-1/2"	*
		/Z2	Welding adapter, Tri-Clamp2"	
	Calibration report	/Q1	Calibration report provided by our company	
	Wetted parts treatment	/G1	Ungrease treatment	
		/G2	Electropolishing treatment	

Disclaimer: all the data used in the product description is not legally binding. Relevant technical details may be changed due to further improve

Factory settings and parameters

Item	Menu mark	Factory setting value
Tag position	None	0(No specific settings)
Analog output type	mA	Liner (No specific settings)
Display mode	DISP	PV(No specific settings)
Alarm signal	ALARM	No(No specific settings)

Item	Menu mark	Factory setting value
Damping value	DAMP	0(No specific settings)
4mA Lower range value	LRV	According to the order
20mA Upper range value	URV	According to the order
Process unit	U	According to the order

scan & follow LEEG wechat

check website for more info

LEEG SENSING TOMORROW

Shanghai LEEG Instruments Co.,Ltd

ADD: No.100 Duhui Road, Minhang District, Shanghai China
Postcode:201109
Tel: (86) 21-31261976
Fax: (86) 21-31261975
E-mail:sales@leegsensor.com info@leegsensor.com
Web: www.leegsensor.com

Disclaimer: all the data used in the product description is not legally binding. Relevant technical details may be changed due to further improve